DX6VS

FIT

Daikin *Fit* High-Efficiency, Communicating, Variable-Speed, Inverter Drive Side Discharge Split System Air Conditioner

Contents

Nomenclature....2
Product Specifications....3
Expanded Cooling Data....4
DTA119A71 Expanded Cooling Data....27
Performance Data
Standard Mode / Boost Mode....41
Sound Data
Sound Power....45
Sound Pressure....46
Quite Mode....47
Sound Power & Sound Pressure....47
AHRI Ratings (see note)....48
Wiring Diagram....49
Dimensions....52
Accessories....54

Standard Features

- Daikin variable-speed swing compressors
- Quiet digitally commutated fan motor
- High-density compressor sound blanket
- Compatible with Daikin *One+* smart thermostat and other Daikin communicating equipment
- Daikin control algorithmic logic
- In communicating mode, only two low-voltage wires to outdoor unit required
- Diagnostic indicator lights, seven-segment LED display, and fault code storage
- Daikin Inside intelligence for diagnostics
- Quiet-mode - provides enhanced acoustical comfort, up to 3 different sound levels (as low as 45dBA)
- Field-selectable boost mode increases compressor speed during unusually high loads
- Field-installed bi-flow filter drier
- Coil and ambient temperature sensors
- Suction pressure transducer
- Sweat connection service valves with easy access to gauge ports
- AHRI Certified; ETL Listed

Cabinet Features

- Heavy-gauge galvanized steel cabinet with grille-style sound control side design
- Custom Ivory white powder-paint finish
- High corrosion-resistant (ZAM®), unpainted steel bottom frame and legs on 1.5-3-ton models
- 500-hour salt-spray tested
- Wire fan discharge grille
- Top and side maintenance access
- When properly anchored, meets the 2020 Florida Building Code unit integrity requirements for hurricane-type winds (Anchor bracket kits available.)

* Complete warranty details available from your local dealer or at www.daikincomfort.com. To receive the 12-Year Unit Replacement Limited Warranty and 12-Year Parts Limited Warranty, online registration must be completed within 60 days of installation. Additional requirements for annual maintenance are required for the Unit Replacement Limited Warranty. Online registration and some of the additional requirements are not required in California or Québec. The duration of warranty coverage in Texas and Florida differs in some cases.

D	X	6	V	S	S	18	1	0	A	A
1	2	3	4	5	6	7,8	9	10	11	12

Brand
D Daikin

Type
X – AC R-410A
Z – HP R-410A

SEER

3 – 13.4-13.7	7 – 16.6- 17.5
4 – 13.8-14.5	8 – 17.6- 18.5
5 – 14.6-15.5	9 – 18.6- 19.5
6 – 15.6-16.5	0 – 19.6 +

Compressor
V – Variable Speed

Feature Set
S – Side Discharge Communicating

Sales Region
S – Southeast & North
A – All

Tonnage Nominal

18- 1½ tons	42- 3½ Tons
24- 2 tons	48- 4 Tons
30- 2½ tons	60- 5 Tons
36- 3 tons	

Electrical
1 – 208-230 V, 1 Phase, 60 Hz

Variation
W – Southwest Region (No coil only ratings)

Major Revision
A

Minor Revision
A

	DX6VSS 1810A*	DX6VSS 2410A*	DX6VSS 3010A*	DX6VSS 3610A*	DX6VSS 4210A*	DX6VSS 4810A*	DX6VSS 6010A*
Capacities (AHRI Rated)							
Max. Cooling (BTU/h)	16,600	22,200	27,800	33,600	39,500	45,000	53,000
Ambient Operation Range Cooling (°FDB(°CDB))	0 to 115 (-17.8 to 46.1)						
Compressor							
Type	Swing	Swing	Swing	Swing	Swing	Swing	Swing
RLA	10.0	13.4	16.8	16.8	25.5	25.5	26.9
Condenser Fan Motor							
Horsepower	0.09	0.09	0.20	0.20	0.36	0.36	0.36
FLA	1.15	1.15	2.00	2.00	1.63	1.63	1.63
Refrigeration System							
Refrigerant Line Size[1]							
Liquid Line Size (“O.D.)	⅜"	⅜"	⅜"	⅜"	⅜"	⅜"	⅜"
Suction Line Size (“O.D.)	¾"	¾"	⅞"	⅞"	1⅛"	1⅛"	1⅛"
Refrigerant Connection Size							
Liquid Valve Size (“O.D.)	⅜"	⅜"	⅜"	⅜"	⅜"	⅜"	⅜"
Suction Valve Size (“O.D.)	¾"	¾"	⅞"	⅞"	⅞"	⅞"	⅞"
Valve Connection Type	Front Sealing	Front Sealing	Front Sealing	Front Sealing	Front and Back Sealing	Front and Back Sealing	Front and Back Sealing
Refrigerant Charge (oz.)	76	76	79	85	111	111	131
Expansion Device	EEV	EEV	EEV	EEV	EEV	EEV	EEV
Superheat at Service Valve	Auto-control	Auto-control	Auto-control	Auto-control	Auto-control	Auto-control	Auto-control
Subcooling at Service Valve	10±1°F	12±1°F	14±1°F	15±1°F	8±1°F	9±1°F	9±1°F
Electrical Data							
Voltage / Phase (60 Hz)	208-230/1	208-230/1	208-230/1	208-230/1	208-230/1	208-230/1	208-230/1
Minimum Circuit Ampacity[2]	14.6	18.8	23.9	23.9	34.4	34.4	36.2
Max. Overcurrent Protection[3]	15	20	25	25	35	35	40
Min / Max Volts	197/253	197/253	197/253	197/253	197/253	197/253	197/253
Electrical Conduit Size	½"	½"	½"	½"	½" or ¾"	½" or ¾"	½" or ¾"
Equipment Weight (lbs)	119	119	129	133	163	163	174
Ship Weight (lbs)	133	133	143	148	183	183	196

[1] Tested and rated in accordance with ANSI/AHRI Standard 210/240

[2] Wire size should be determined in accordance with National Electrical Codes; extensive wire runs will require larger wire sizes

[3] Must use time-delay fuses or HACR-type circuit breakers of the same size as noted.

Notes

- Always check the S&R plate for electrical data on the unit being installed.
- Installer will need to supply ⅞” to 1⅛” adapters for suction line connections.
- Unit is charged with refrigerant for 15’ of ⅜” liquid line. System charge must be adjusted per Installation Instructions Final Charge Procedure.

(See table below for allowable line set diameter)

Unit Tons	Allowable Line Set Diameter						
	Liquid			Suction			
	¼	5/16	⅜	⅝	¾	⅞	1⅛
1.5	x	x	x	x[4]	x		
2.0		x	x	x[4]	x		
2.5		x	x		x[4]	x	
3.0		x	x		x[4]	x	
3.5			x			x	x
4.0			x			x	x
5.0			x			x	x

x Allowable combination

[4] For marked combinations, if normal ambient operation temperature is less than 14°F, limit line set length to 50 ft. max.

Outdoor Unit	DX6VS*361*A*	
Indoor Unit	D*96VC0403B/0603B D*97MC0603B D*80VC0603B/0803B MBVC1200 D*96SC0603BU	Trim more than 10% settings are invalid. Trimmed up CFM makes miss matching error.

Outdoor Unit	DX6VS*601*A*	
Indoor Unit	D*96VC0804C D*97MC0804C DM80VX0804C	Trim more than 5% settings are invalid. Trimmed up CFM makes miss matching error.

	DX6VSA 181WA*	DX6VSA 241WA*	DX6VSA 301WA*	DX6VSA 361WA*
Capacities (AHRI Rated)				
Max. Cooling (BTU/h)	16,600	22,200	27,800	32,400
Ambient Operation Range Cooling (°FDB(°CDB))	00 to 115 (-17.8 to 46.1)			
Compressor				
Type	Swing	Swing	Swing	Swing
RLA	10.0	13.4	16.8	16.8
Condenser Fan Motor				
Horsepower	0.09	0.09	0.20	0.20
FLA	1.15	1.15	2.00	2.00
Refrigeration System				
Refrigerant Line Size[1]				
Liquid Line Size (“O.D.)	⅜"	⅜"	⅜"	⅜"
Suction Line Size (“O.D.)	¾"	¾"	⅞"	⅞"
Refrigerant Connection Size				
Liquid Valve Size (“O.D.)	⅜"	⅜"	⅜"	⅜"
Suction Valve Size (“O.D.)	¾"	¾"	⅞"	⅞"
Valve Connection Type	Front Sealing	Front Sealing	Front Sealing	Front Sealing
Refrigerant Charge (oz.)	76	76	79	85
Expansion Device	EEV	EEV	EEV	EEV
Superheat at Service Valve	Auto-control	Auto-control	Auto-control	Auto-control
Subcooling at Service Valve	10±1°F	12±1°F	14±1°F	13±1°F
Electrical Data				
Voltage / Phase (60 Hz)	208-230/1	208-230/1	208-230/1	208-230/1
Minimum Circuit Ampacity[2]	14.6	18.8	23.9	23.9
Max. Overcurrent Protection[3]	15	20	25	25
Min / Max Volts	197/253	197/253	197/253	197/253
Electrical Conduit Size	½"	½"	½"	½"
Equipment Weight (lbs)	119	119	129	133
Ship Weight (lbs)	133	133	143	148

[1] Tested and rated in accordance with ANSI/AHRI Standard 210/240

[2] Wire size should be determined in accordance with National Electrical Codes; extensive wire runs will require larger wire sizes

[3] Must use time-delay fuses or HACR-type circuit breakers of the same size as noted.

Notes

- Always check the S&R plate for electrical data on the unit being installed.
- Installer will need to supply ⅞” to 1⅛” adapters for suction line connections.
- Unit is charged with refrigerant for 15’ of ⅜” liquid line. System charge must be adjusted per Installation Instructions Final Charge Procedure.

Expanded Cooling Data — DX6VSS1810A* / DV24FECB14A*

			Outdoor Ambient Temperature																							
			65°F				75°F				85°F				95°F				105°F				115°F			
			Entering Indoor Wet Bulb Temperature																							
IDB	Airflow		59	63	67	71	59	63	67	71	59	63	67	71	59	63	67	71	59	63	67	71	59	63	67	71
70	520	MBh	15.9	16.6	17.6		16.7	16.9	17.4		16.3	16.5	17.0		15.5	15.7	16.2		14.6	14.8	15.3		13.7	14.0	14.5	
		S/T	0.62	0.54	0.40		0.62	0.54	0.40		0.65	0.57	0.43		1.00	0.59	0.45		1.00	0.61	0.47		1.00	0.67	0.52	
		ΔT	21	19	13		18	16	13		18	16	13		18	16	13		18	16	13		19	17	14	
		kW	1.04	1.07	1.07		1.20	1.20	1.20		1.36	1.35	1.35		1.52	1.52	1.51		1.70	1.70	1.70		1.91	1.91	1.91	
		Amps	3.6	3.8	3.9		4.5	4.5	4.4		5.1	5.1	5.1		5.8	5.8	5.8		6.6	6.6	6.6		7.5	7.5	7.5	
		Hi PR	243	245	245		280	281	283		320	321	323		363	364	366		410	411	412		459	460	462	
		Lo PR	125	126	131		133	135	138		140	142	145		146	147	151		151	153	156		158	160	163	
	610	MBh	16.6	17.3	17.9		17.0	17.2	17.7		16.5	16.8	17.3		15.8	16.0	16.5		14.8	15.1	15.6		14.0	14.2	14.7	
		S/T	0.69	0.61	0.47		0.70	0.62	0.48		0.73	0.65	0.51		1.00	0.67	0.53		1.00	0.69	0.55		1.00	0.74	0.60	
		ΔT	19	15	12		17	15	12		17	15	12		17	15	12		16	15	12		17	16	13	
		kW	1.08	1.08	1.07		1.21	1.21	1.21		1.36	1.36	1.36		1.53	1.53	1.52		1.71	1.71	1.70		1.92	1.92	1.92	
		Amps	3.8	3.9	3.9		4.5	4.5	4.5		5.2	5.1	5.1		5.9	5.9	5.8		6.6	6.6	6.6		7.6	7.6	7.6	
		Hi PR	246	245	247		282	283	285		322	324	325		366	367	368		412	413	415		462	463	464	
		Lo PR	127	130	133		136	137	140		142	144	147		148	150	153		154	155	158		161	162	165	
	700	MBh	17.4	17.7	18.2		17.3	17.5	18.0		16.8	17.1	17.6		16.1	16.3	16.8		15.2	15.4	15.9		14.3	14.5	15.0	
		S/T	0.73	0.65	0.51		0.74	0.66	0.52		1.00	0.69	0.54		1.00	0.71	0.56		1.00	0.73	0.59		1.00	1.00	0.64	
		ΔT	16	14	11		16	14	11		16	14	11		16	14	11		15	14	11		16	15	12	
		kW	1.09	1.08	1.08		1.22	1.22	1.22		1.37	1.37	1.37		1.53	1.53	1.53		1.72	1.71	1.71		1.93	1.93	1.93	
		Amps	3.9	3.9	3.9		4.5	4.5	4.5		5.2	5.2	5.2		5.9	5.9	5.9		6.7	6.7	6.7		7.6	7.6	7.6	
		Hi PR	247	248	249		285	286	288		325	326	328		368	369	371		414	415	417		464	465	467	
		Lo PR	130	132	135		138	140	143		145	146	150		151	152	155		156	158	161		163	165	168	
75	520	MBh	15.9	16.6	17.6	18.4	16.7	16.9	17.5	18.2	16.3	16.5	17.0	17.8	15.5	15.8	16.3	17.0	14.6	14.8	15.3	16.1	13.7	14.0	14.5	15.3
		S/T	0.75	0.67	0.53	0.38	1.00	0.68	0.54	0.39	1.00	0.70	0.56	0.41	1.00	0.72	0.58	0.43	1.00	0.75	0.61	0.46	1.00	1.00	0.66	0.51
		ΔT	25	23	17	14	21	20	17	14	22	20	17	14	21	20	17	14	21	20	17	13	22	21	18	14
		kW	1.04	1.07	1.07	1.08	1.20	1.20	1.20	1.21	1.35	1.35	1.35	1.36	1.52	1.52	1.51	1.52	1.70	1.70	1.70	1.71	1.91	1.91	1.91	1.92
		Amps	3.6	3.8	3.9	3.9	4.5	4.5	4.4	4.5	5.1	5.1	5.1	5.1	5.8	5.8	5.8	5.8	6.6	6.6	6.6	6.6	7.5	7.5	7.5	7.6
		Hi PR	243	245	245	249	280	281	283	287	320	321	323	327	363	364	366	370	410	411	413	417	459	460	462	466
		Lo PR	125	126	131	136	134	135	138	144	140	142	145	150	146	147	151	156	151	153	156	162	158	160	163	169
	610	MBh	16.6	17.4	17.9	18.6	17.0	17.2	17.7	18.5	16.5	16.8	17.3	18.0	15.8	**16.0**	16.5	17.3	14.8	15.1	15.6	16.4	14.0	14.2	14.7	15.5
		S/T	0.83	0.75	0.61	0.46	1.00	0.75	0.61	0.46	1.00	0.78	0.64	0.49	1.00	**0.80**	0.66	0.51	1.00	1.00	0.68	0.53	1.00	1.00	0.74	0.59
		ΔT	23	19	16	12	20	19	16	12	20	19	16	13	20	**19**	16	12	20	18	15	12	21	19	16	13
		kW	1.08	1.08	1.07	1.08	1.21	1.21	1.21	1.22	1.36	1.36	1.36	1.37	1.53	**1.52**	1.52	1.53	1.71	1.71	1.70	1.71	1.92	1.92	1.92	1.93
		Amps	3.8	3.9	3.9	3.9	4.5	4.5	4.5	4.5	5.1	5.1	5.1	5.2	5.9	**5.8**	5.8	5.9	6.6	6.6	6.6	6.7	7.6	7.6	7.6	7.6
		Hi PR	246	245	247	251	283	284	285	290	323	324	325	330	366	**367**	369	373	412	413	415	419	462	463	465	469
		Lo PR	127	130	133	138	136	137	140	146	142	144	147	153	148	**150**	153	158	154	155	158	164	161	162	165	171
	700	MBh	17.4	17.7	18.2	19.0	17.3	17.5	18.0	18.8	16.8	17.1	17.6	18.4	16.1	16.3	16.8	17.6	15.2	15.4	15.9	16.7	14.3	14.6	15.1	15.8
		S/T	0.87	0.79	0.65	0.50	1.00	0.79	0.65	0.50	1.00	0.82	0.68	0.53	1.00	0.84	0.70	0.55	1.00	1.00	0.72	0.57	1.00	1.00	0.78	0.63
		ΔT	19	18	15	11	19	18	15	11	19	18	15	12	19	18	15	11	19	17	14	11	20	18	15	12
		kW	1.08	1.08	1.08	1.09	1.22	1.22	1.22	1.23	1.37	1.37	1.37	1.38	1.53	1.53	1.53	1.54	1.71	1.71	1.71	1.72	1.93	1.93	1.92	1.93
		Amps	3.9	3.9	3.9	4.0	4.5	4.5	4.5	4.6	5.2	5.2	5.2	5.2	5.9	5.9	5.9	5.9	6.7	6.7	6.7	6.7	7.6	7.6	7.6	7.6
		Hi PR	247	248	250	254	285	286	288	292	325	326	328	332	368	369	371	375	415	416	417	422	464	465	467	471
		Lo PR	130	132	135	141	138	140	143	148	145	146	150	155	151	152	155	161	156	158	161	166	163	165	168	173

IDB = Entering Indoor Dry Bulb Temperature

Shaded area is ACCA (TVA) conditions

kW = Total system power

High and low pressures are measured at the liquid and suction service valves.

Amps = outdoor unit amps (comp.+fan)

Airflow may vary depending on actual ambient conditions and system operation modes.

EXPANDED COOLING DATA — DX6VSS1810A* / DV24FECB14A* (CONT.)

			Outdoor Ambient Temperature																							
			65°F				75°F				85°F				95°F				105°F				115°F			
			Entering Indoor Wet Bulb Temperature																							
IDB	Airflow		59	63	67	71	59	63	67	71	59	63	67	71	59	63	67	71	59	63	67	71	59	63	67	71
80	520	MBh	16.0	16.7	17.7	18.5	16.8	17.0	17.5	18.3	16.4	16.6	17.1	17.9	15.6	15.8	16.3	17.1	14.7	14.9	15.4	16.2	13.8	14.1	14.6	15.3
		S/T	1.00	0.80	0.66	0.51	1.00	0.81	0.67	0.52	1.00	0.83	0.69	0.54	1.00	1.00	0.71	0.56	1.00	1.00	0.74	0.59	1.00	1.00	0.79	0.64
		ΔT	29	27	20	17	25	23	20	17	25	24	21	17	25	23	20	17	25	23	20	17	26	24	21	18
		kW	1.04	1.07	1.07	1.08	1.20	1.20	1.20	1.21	1.36	1.35	1.35	1.36	1.52	1.52	1.51	1.52	1.70	1.70	1.70	1.71	1.91	1.91	1.91	1.92
		Amps	3.6	3.8	3.9	3.9	4.5	4.5	4.4	4.5	5.1	5.1	5.1	5.1	5.8	5.8	5.8	5.9	6.6	6.6	6.6	6.6	7.5	7.5	7.5	7.6
		Hi PR	243	245	245	249	281	282	283	288	321	322	323	328	364	365	367	371	410	411	413	417	460	461	463	467
		Lo PR	125	127	131	137	134	136	139	144	141	142	146	151	146	148	151	157	152	154	157	162	159	161	164	169
	610	MBh	16.7	17.4	18.0	18.7	17.1	17.3	17.8	18.6	16.6	16.9	17.4	18.1	15.9	16.1	**16.6**	17.4	14.9	15.2	15.7	16.4	14.1	14.3	14.8	15.6
		S/T	1.00	0.88	0.74	0.59	1.00	0.89	0.74	0.60	1.00	0.91	0.77	0.62	1.00	1.00	**0.79**	0.64	1.00	1.00	0.81	0.66	1.00	1.00	0.87	0.72
		ΔT	28	22	19	16	24	22	19	16	24	22	19	16	24	22	**19**	16	24	22	19	16	25	23	20	17
		kW	1.08	1.08	1.07	1.09	1.21	1.21	1.21	1.22	1.36	1.36	1.36	1.37	1.53	1.53	**1.52**	1.53	1.71	1.71	1.70	1.72	1.92	1.92	1.92	1.93
		Amps	3.8	3.9	3.9	3.9	4.5	4.5	4.5	4.5	5.1	5.1	5.1	5.2	5.9	5.9	**5.8**	5.9	6.6	6.6	6.6	6.7	7.6	7.6	7.6	7.6
		Hi PR	247	246	248	252	283	284	286	290	323	324	326	330	366	367	**369**	373	413	414	415	420	462	463	465	469
		Lo PR	127	130	133	139	136	138	141	146	143	145	148	153	149	150	**153**	159	154	156	159	164	161	163	166	171
	700	MBh	17.5	17.8	18.3	19.0	17.4	17.6	18.1	18.9	16.9	17.2	17.7	18.4	16.2	16.4	16.9	17.7	15.2	15.5	16.0	16.8	14.4	14.6	15.1	15.9
		S/T	1.00	0.92	0.78	0.63	1.00	0.92	0.78	0.63	1.00	1.00	0.81	0.66	1.00	1.00	0.83	0.68	1.00	1.00	0.85	0.70	1.00	1.00	1.00	0.76
		ΔT	23	21	18	15	23	21	18	15	23	21	18	15	23	21	18	15	23	21	18	15	24	22	19	16
		kW	1.09	1.08	1.08	1.09	1.22	1.22	1.22	1.23	1.37	1.37	1.37	1.38	1.53	1.53	1.53	1.54	1.72	1.71	1.71	1.72	1.93	1.93	1.93	1.94
		Amps	3.9	3.9	3.9	4.0	4.5	4.5	4.5	4.6	5.2	5.2	5.2	5.2	5.9	5.9	5.9	5.9	6.7	6.7	6.7	6.7	7.6	7.6	7.6	7.6
		Hi PR	247	248	250	254	285	287	288	292	325	327	328	332	369	370	371	376	415	416	418	422	465	466	467	472
		Lo PR	131	133	136	141	139	140	143	149	145	147	150	156	151	153	156	161	157	158	161	167	164	165	168	174
85	520	MBh	16.3	16.9	18.0	18.7	17.1	17.3	17.8	18.6	16.6	16.9	17.4	18.2	15.9	16.1	16.6	17.4	15.0	15.2	15.7	16.5	14.1	14.3	14.9	15.6
		S/T	1.00	0.91	0.77	0.62	1.00	1.00	0.77	0.62	1.00	1.00	0.80	0.65	1.00	1.00	0.82	0.67	1.00	1.00	1.00	0.69	1.00	1.00	1.00	0.75
		ΔT	33	31	24	20	28	27	24	20	28	27	24	21	28	27	24	20	28	26	23	20	29	27	24	21
		kW	1.04	1.07	1.07	1.08	1.21	1.21	1.20	1.21	1.36	1.36	1.35	1.36	1.52	1.52	1.52	1.53	1.70	1.70	1.70	1.71	1.92	1.91	1.91	1.92
		Amps	3.6	3.8	3.9	3.9	4.5	4.5	4.5	4.5	5.1	5.1	5.1	5.2	5.8	5.8	5.8	5.9	6.6	6.6	6.6	6.7	7.6	7.5	7.5	7.6
		Hi PR	245	246	246	251	282	283	285	289	322	323	325	329	365	366	368	372	411	412	414	418	461	462	464	468
		Lo PR	127	128	133	138	136	138	141	146	143	144	147	153	148	150	153	158	154	155	159	164	161	162	166	171
	610	MBh	16.9	17.7	18.2	19.0	17.3	17.6	18.1	18.9	16.9	17.1	17.6	18.4	16.1	16.4	16.9	17.7	15.2	15.5	16.0	16.7	14.4	14.6	15.1	15.9
		S/T	1.00	0.98	0.84	0.69	1.00	1.00	0.85	0.70	1.00	1.00	0.88	0.73	1.00	1.00	0.90	0.75	1.00	1.00	1.00	0.77	1.00	1.00	1.00	0.82
		ΔT	31	25	22	19	27	25	22	19	27	26	23	19	27	25	22	19	27	25	22	19	28	26	23	20
		kW	1.08	1.08	1.08	1.09	1.22	1.21	1.21	1.22	1.37	1.36	1.36	1.37	1.53	1.53	1.53	1.54	1.71	1.71	1.71	1.72	1.92	1.92	1.92	1.93
		Amps	3.8	3.9	3.9	4.0	4.5	4.5	4.5	4.5	5.2	5.2	5.1	5.2	5.9	5.9	5.9	5.9	6.7	6.7	6.6	6.7	7.6	7.6	7.6	7.6
		Hi PR	248	247	249	253	284	285	287	291	324	325	327	331	367	368	370	374	414	415	417	421	463	464	466	470
		Lo PR	129	132	135	141	138	140	143	148	145	146	150	155	151	152	155	161	156	158	161	166	163	165	168	173
	700	MBh	17.8	18.1	18.6	19.3	17.7	17.9	18.4	19.2	17.2	17.5	18.0	18.7	16.5	16.7	17.2	18.0	15.5	15.8	16.3	17.0	14.7	14.9	15.4	16.2
		S/T	1.00	1.00	0.88	0.73	1.00	1.00	0.89	0.74	1.00	1.00	0.91	0.77	1.00	1.00	0.93	0.79	1.00	1.00	1.00	0.81	1.00	1.00	1.00	0.86
		ΔT	26	25	21	18	26	24	21	18	26	25	22	18	26	24	21	18	26	24	21	18	27	25	22	19
		kW	1.09	1.09	1.08	1.09	1.22	1.22	1.22	1.23	1.37	1.37	1.37	1.38	1.54	1.53	1.53	1.54	1.72	1.72	1.71	1.72	1.93	1.93	1.93	1.94
		Amps	4.0	3.9	3.9	4.0	4.5	4.5	4.5	4.6	5.2	5.2	5.2	5.2	5.9	5.9	5.9	5.9	6.7	6.7	6.7	6.7	7.6	7.6	7.6	7.6
		Hi PR	248	249	251	255	287	288	289	294	327	328	329	334	370	371	372	377	416	417	419	423	466	467	469	473
		Lo PR	133	134	138	143	141	142	145	151	147	149	152	157	153	155	158	163	159	160	163	169	166	167	170	176

IDB = Entering Indoor Dry Bulb Temperature

Shaded area is AHRI conditions

kW = Total system power

High and low pressures are measured at the liquid and suction service valves.

Amps = outdoor unit amps (comp.+fan)

Airflow may vary depending on actual ambient conditions and system operation modes.

Expanded Cooling Data — DX6VSS2410A* / DV24FECB14A*

			Outdoor Ambient Temperature																							
			65°F				75°F				85°F				95°F				105°F				115°F			
			Entering Indoor Wet Bulb Temperature																							
IDB	Airflow		59	63	67	71	59	63	67	71	59	63	67	71	59	63	67	71	59	63	67	71	59	63	67	71
70	680	MBh	21.2	22.3	23.5		22.3	22.6	23.3		21.7	22.1	22.7		20.7	21.0	21.7		19.5	19.8	20.5		18.4	18.7	19.3	
		S/T	0.61	0.53	0.39		0.61	0.53	0.40		0.64	0.56	0.42		0.66	0.58	0.44		1.00	0.60	0.46		1.00	0.66	0.52	
		ΔT	20	19	13		18	16	13		18	16	13		18	16	13		18	16	13		19	17	14	
		kW	1.44	1.50	1.53		1.73	1.73	1.73		1.95	1.95	1.95		2.19	2.19	2.19		2.46	2.46	2.45		2.77	2.77	2.76	
		Amps	5.1	5.3	5.5		6.4	6.4	6.4		7.3	7.3	7.3		8.4	8.4	8.4		9.5	9.5	9.5		10.9	10.9	10.9	
		Hi PR	256	259	264		302	303	305		345	346	348		391	393	394		442	443	445		495	496	498	
		Lo PR	121	122	127		130	131	134		136	138	141		142	143	146		147	148	152		154	155	158	
	800	MBh	22.3	23.2	23.9		22.7	23.0	23.7		22.1	22.4	23.1		21.1	21.4	22.1		19.8	20.2	20.8		18.7	19.0	19.7	
		S/T	0.68	0.61	0.47		0.69	0.61	0.47		0.72	0.64	0.50		1.00	0.66	0.52		1.00	0.68	0.54		1.00	0.73	0.59	
		ΔT	19	15	12		17	15	12		17	15	12		17	15	12		16	15	12		17	16	13	
		kW	1.52	1.55	1.54		1.74	1.74	1.74		1.96	1.96	1.96		2.20	2.20	2.20		2.47	2.47	2.46		2.78	2.78	2.78	
		Amps	5.4	5.6	5.6		6.4	6.4	6.4		7.4	7.4	7.4		8.4	8.4	8.4		9.6	9.6	9.6		10.9	10.9	10.9	
		Hi PR	261	264	266		305	306	308		348	349	351		394	395	397		444	445	447		498	499	501	
		Lo PR	123	126	129		132	133	136		138	140	143		144	145	148		149	151	154		156	157	161	
	920	MBh	23.3	23.6	24.3		23.1	23.4	24.1		22.5	22.8	23.5		21.5	21.8	22.5		20.3	20.6	21.3		19.1	19.5	20.1	
		S/T	0.72	0.64	0.51		0.73	0.65	0.51		0.76	0.68	0.54		1.00	0.70	0.56		1.00	0.72	0.58		1.00	0.77	0.63	
		ΔT	16	14	11		16	14	11		16	14	11		16	14	11		15	14	11		16	15	12	
		kW	1.56	1.56	1.55		1.76	1.75	1.75		1.98	1.97	1.97		2.21	2.21	2.21		2.48	2.48	2.47		2.79	2.79	2.79	
		Amps	5.6	5.6	5.6		6.5	6.5	6.5		7.4	7.4	7.4		8.5	8.5	8.5		9.6	9.6	9.6		11.0	11.0	11.0	
		Hi PR	266	267	269		307	308	310		350	351	353		397	398	400		447	448	450		500	501	503	
		Lo PR	127	128	131		134	136	139		141	142	145		146	148	151		152	153	156		158	160	163	
75	680	MBh	21.3	22.3	23.5	24.6	22.3	22.7	23.3	24.4	21.8	22.1	22.7	23.8	20.7	21.1	21.7	22.8	19.5	19.8	20.5	21.5	18.4	18.7	19.4	20.4
		S/T	0.75	0.66	0.52	0.37	0.75	0.67	0.53	0.38	1.00	0.69	0.55	0.41	1.00	0.71	0.57	0.43	1.00	0.74	0.60	0.45	1.00	1.00	0.65	0.50
		ΔT	24	23	17	14	21	20	17	14	22	20	17	14	21	20	17	13	21	19	16	13	22	20	17	14
		kW	1.44	1.50	1.53	1.54	1.73	1.73	1.73	1.74	1.95	1.95	1.95	1.96	2.19	2.19	2.18	2.20	2.46	2.45	2.45	2.47	2.77	2.77	2.76	2.78
		Amps	5.1	5.3	5.5	5.6	6.4	6.4	6.4	6.4	7.3	7.3	7.3	7.4	8.4	8.4	8.3	8.4	9.5	9.5	9.5	9.6	10.9	10.9	10.9	10.9
		Hi PR	257	260	264	268	302	303	305	310	345	346	348	353	392	393	395	399	442	443	445	449	495	496	498	503
		Lo PR	121	122	127	132	130	131	134	139	136	138	141	146	142	143	146	151	147	148	152	157	154	155	158	164
	800	MBh	22.3	23.2	23.9	24.9	22.7	23.0	23.7	24.7	22.1	22.4	23.1	24.1	21.1	**21.4**	22.1	23.1	19.8	20.2	20.8	21.9	18.7	19.0	19.7	20.7
		S/T	0.82	0.74	0.60	0.45	0.82	0.74	0.61	0.46	1.00	0.77	0.63	0.48	1.00	**0.79**	0.65	0.50	1.00	0.81	0.67	0.53	1.00	1.00	0.73	0.58
		ΔT	23	19	15	12	20	18	15	12	20	19	16	13	20	**18**	15	12	20	18	15	12	21	19	16	13
		kW	1.52	1.54	1.54	1.56	1.74	1.74	1.74	1.75	1.96	1.96	1.96	1.97	2.20	**2.20**	2.20	2.21	2.47	2.47	2.46	2.48	2.78	2.78	2.78	2.79
		Amps	5.4	5.6	5.6	5.6	6.4	6.4	6.4	6.5	7.4	7.4	7.4	7.4	8.4	**8.4**	8.4	8.5	9.6	9.6	9.6	9.6	10.9	10.9	10.9	11.0
		Hi PR	261	265	267	271	305	306	308	312	348	349	351	355	394	**396**	397	402	445	446	447	452	498	499	501	506
		Lo PR	123	126	129	134	132	133	136	142	138	140	143	148	144	**145**	148	154	149	151	154	159	156	157	161	166
	920	MBh	23.3	23.7	24.3	25.4	23.1	23.4	24.1	25.2	22.5	22.9	23.5	24.6	21.5	21.8	22.5	23.5	20.3	20.6	21.3	22.3	19.2	19.5	20.1	21.2
		S/T	0.86	0.78	0.64	0.49	1.00	0.78	0.64	0.50	1.00	0.81	0.67	0.52	1.00	0.83	0.69	0.54	1.00	0.85	0.71	0.57	1.00	1.00	0.77	0.62
		ΔT	19	18	15	11	19	18	14	11	19	18	15	12	19	17	14	11	19	17	14	11	20	18	15	12
		kW	1.56	1.56	1.55	1.57	1.75	1.75	1.75	1.76	1.97	1.97	1.97	1.98	2.21	2.21	2.21	2.22	2.48	2.48	2.47	2.49	2.79	2.79	2.79	2.80
		Amps	5.6	5.6	5.6	5.7	6.5	6.5	6.5	6.5	7.4	7.4	7.4	7.5	8.5	8.5	8.4	8.5	9.6	9.6	9.6	9.7	11.0	11.0	11.0	11.0
		Hi PR	266	267	269	274	307	308	310	315	351	352	353	358	397	398	400	405	447	448	450	455	501	502	504	508
		Lo PR	127	128	131	137	134	136	139	144	141	142	145	150	146	148	151	156	152	153	156	161	158	160	163	168

IDB = Entering Indoor Dry Bulb Temperature

Shaded area is ACCA (TVA) conditions

kW = Total system power

High and low pressures are measured at the liquid and suction service valves.

Amps = outdoor unit amps (comp.+fan)

Airflow may vary depending on actual ambient conditions and system operation modes.

EXPANDED COOLING DATA — DX6VSS2410A* / DV24FECB14A*(CONT.)

			Outdoor Ambient Temperature																							
			65°F				75°F				85°F				95°F				105°F				115°F			
			Entering Indoor Wet Bulb Temperature																							
IDB	Airflow		59	63	67	71	59	63	67	71	59	63	67	71	59	63	67	71	59	63	67	71	59	63	67	71
80	680	MBh	21.4	22.4	23.7	24.7	22.5	22.8	23.5	24.5	21.9	22.2	22.9	23.9	20.9	21.2	21.8	22.9	19.6	19.9	20.6	21.6	18.5	18.8	19.5	20.5
		S/T	0.88	0.79	0.65	0.50	1.00	0.80	0.66	0.51	1.00	0.82	0.68	0.54	1.00	0.84	0.70	0.56	1.00	1.00	0.73	0.58	1.00	1.00	0.78	0.63
		ΔT	29	27	20	17	25	23	20	17	25	24	20	17	25	23	20	17	25	23	20	17	26	24	21	18
		kW	1.44	1.50	1.53	1.55	1.73	1.73	1.73	1.74	1.95	1.95	1.95	1.96	2.19	2.19	2.19	2.20	2.46	2.45	2.45	2.47	2.77	2.77	2.76	2.78
		Amps	5.1	5.3	5.5	5.6	6.4	6.4	6.4	6.4	7.3	7.3	7.3	7.4	8.4	8.4	8.4	8.4	9.5	9.5	9.5	9.6	10.9	10.9	10.9	10.9
		Hi PR	257	260	264	269	303	304	306	310	346	347	349	353	392	393	395	400	442	443	445	450	496	497	499	503
		Lo PR	122	123	127	132	130	132	135	140	137	138	141	146	142	144	147	152	148	149	152	157	154	156	159	164
	800	MBh	22.4	23.3	24.0	25.0	22.8	23.1	23.8	24.8	22.2	22.5	23.2	24.2	21.2	21.5	**22.2**	23.2	20.0	20.3	21.0	22.0	18.8	19.2	19.8	20.9
		S/T	1.00	0.87	0.73	0.58	1.00	0.87	0.73	0.59	1.00	0.90	0.76	0.61	1.00	1.00	**0.78**	0.63	1.00	1.00	0.80	0.66	1.00	1.00	0.86	0.71
		ΔT	27	22	19	16	24	22	19	16	24	22	19	16	24	22	**19**	16	23	22	19	16	24	23	20	17
		kW	1.52	1.55	1.54	1.56	1.74	1.74	1.74	1.75	1.96	1.96	1.96	1.97	2.20	2.20	**2.20**	2.21	2.47	2.47	2.46	2.48	2.78	2.78	2.78	2.79
		Amps	5.4	5.6	5.6	5.6	6.4	6.4	6.4	6.5	7.4	7.4	7.4	7.4	8.4	8.4	**8.4**	8.5	9.6	9.6	9.6	9.6	10.9	10.9	10.9	11.0
		Hi PR	262	265	267	272	305	306	308	313	348	350	351	356	395	396	**398**	402	445	446	448	453	498	500	501	506
		Lo PR	123	126	129	135	132	134	137	142	139	140	143	149	144	146	**149**	154	150	151	154	160	156	158	161	166
	920	MBh	23.4	23.8	24.4	25.5	23.2	23.6	24.2	25.3	22.7	23.0	23.7	24.7	21.6	22.0	22.6	23.7	20.4	20.7	21.4	22.4	19.3	19.6	20.3	21.3
		S/T	1.00	0.91	0.77	0.62	1.00	0.91	0.77	0.63	1.00	0.94	0.80	0.65	1.00	1.00	0.82	0.67	1.00	1.00	0.84	0.70	1.00	1.00	0.89	0.75
		ΔT	23	21	18	15	23	21	18	15	23	21	18	15	23	21	18	15	22	21	18	15	24	22	19	16
		kW	1.56	1.56	1.55	1.57	1.75	1.75	1.75	1.76	1.97	1.97	1.97	1.99	2.21	2.21	2.21	2.22	2.48	2.48	2.47	2.49	2.79	2.79	2.79	2.80
		Amps	5.6	5.6	5.6	5.7	6.5	6.5	6.5	6.5	7.4	7.4	7.4	7.5	8.5	8.5	8.4	8.5	9.6	9.6	9.6	9.7	11.0	11.0	11.0	11.0
		Hi PR	267	268	270	274	308	309	311	315	351	352	354	359	397	399	400	405	448	449	451	455	501	502	504	509
		Lo PR	127	129	132	137	135	136	139	144	141	143	146	151	147	148	151	157	152	154	157	162	159	160	164	169
85	680	MBh	21.7	22.8	24.0	25.1	22.8	23.2	23.8	24.9	22.3	22.6	23.2	24.3	21.2	21.6	22.2	23.3	20.0	20.3	21.0	22.0	18.9	19.2	19.9	20.9
		S/T	1.00	0.89	0.75	0.61	1.00	0.90	0.76	0.61	1.00	1.00	0.79	0.64	1.00	1.00	0.81	0.66	1.00	1.00	0.83	0.68	1.00	1.00	1.00	0.74
		ΔT	32	30	23	20	28	26	23	20	28	27	24	21	28	26	23	20	28	26	23	20	29	27	24	21
		kW	1.44	1.51	1.53	1.55	1.74	1.73	1.73	1.75	1.96	1.95	1.95	1.97	2.19	2.19	2.19	2.20	2.46	2.46	2.46	2.47	2.77	2.77	2.77	2.78
		Amps	5.1	5.4	5.5	5.6	6.4	6.4	6.4	6.4	7.4	7.3	7.3	7.4	8.4	8.4	8.4	8.4	9.5	9.5	9.5	9.6	10.9	10.9	10.9	10.9
		Hi PR	258	261	266	270	304	305	307	311	347	348	350	354	393	395	396	401	444	445	447	451	497	498	500	505
		Lo PR	124	125	129	134	132	133	137	142	138	140	143	148	144	145	149	154	149	151	154	159	156	158	161	166
	800	MBh	22.8	23.7	24.4	25.4	23.2	23.5	24.2	25.2	22.6	22.9	23.6	24.6	21.6	21.9	22.6	23.6	20.3	20.7	21.3	22.4	19.2	19.5	20.2	21.2
		S/T	1.00	0.97	0.83	0.69	1.00	1.00	0.84	0.69	1.00	1.00	0.86	0.72	1.00	1.00	0.88	0.74	1.00	1.00	0.91	0.76	1.00	1.00	1.00	0.81
		ΔT	31	25	22	19	27	25	22	19	27	25	22	19	27	25	22	19	27	25	22	19	28	26	23	20
		kW	1.52	1.55	1.55	1.56	1.75	1.75	1.74	1.76	1.97	1.97	1.96	1.98	2.21	2.21	2.20	2.22	2.47	2.47	2.47	2.48	2.79	2.78	2.78	2.80
		Amps	5.4	5.6	5.6	5.6	6.5	6.4	6.4	6.5	7.4	7.4	7.4	7.5	8.4	8.4	8.4	8.5	9.6	9.6	9.6	9.6	11.0	11.0	10.9	11.0
		Hi PR	263	266	268	273	306	308	309	314	350	351	353	357	396	397	399	404	446	447	449	454	500	501	503	507
		Lo PR	125	128	131	136	134	136	139	144	141	142	145	150	146	148	151	156	152	153	156	161	158	160	163	168
	920	MBh	23.8	24.1	24.8	25.9	23.6	23.9	24.6	25.7	23.0	23.4	24.0	25.1	22.0	22.3	23.0	24.0	20.8	21.1	21.8	22.8	19.7	20.0	20.6	21.7
		S/T	1.00	1.00	0.87	0.72	1.00	1.00	0.88	0.73	1.00	1.00	0.90	0.76	1.00	1.00	0.92	0.78	1.00	1.00	1.00	0.80	1.00	1.00	1.00	0.85
		ΔT	26	24	21	18	26	24	21	18	26	25	21	18	26	24	21	18	26	24	21	18	27	25	22	19
		kW	1.56	1.56	1.56	1.57	1.76	1.76	1.75	1.77	1.98	1.98	1.97	1.99	2.22	2.22	2.21	2.23	2.48	2.48	2.48	2.49	2.80	2.79	2.79	2.81
		Amps	5.6	5.6	5.6	5.7	6.5	6.5	6.5	6.5	7.5	7.4	7.4	7.5	8.5	8.5	8.5	8.5	9.6	9.6	9.6	9.7	11.0	11.0	11.0	11.0
		Hi PR	268	269	271	275	309	310	312	317	352	353	355	360	399	400	402	406	449	450	452	456	502	503	505	510
		Lo PR	129	131	134	139	136	138	141	146	143	145	148	153	149	150	153	158	154	155	159	164	161	162	165	171

IDB = Entering Indoor Dry Bulb Temperature

Shaded area is AHRI conditions

kW = Total system power

High and low pressures are measured at the liquid and suction service valves.

Amps = outdoor unit amps (comp.+fan)

Airflow may vary depending on actual ambient conditions and system operation modes.

Expanded Cooling Data — DX6VSS3010A* / DV36FECC14A*

			Outdoor Ambient Temperature																							
			65°F				75°F				85°F				95°F				105°F				115°F			
			Entering Indoor Wet Bulb Temperature																							
IDB	Airflow		59	63	67	71	59	63	67	71	59	63	67	71	59	63	67	71	59	63	67	71	59	63	67	71
70	860	MBh	25.8	27.5	29.5		28.0	28.4	29.2		27.2	27.6	28.5		26.0	26.4	27.2		24.4	24.8	25.6		23.0	23.4	24.2	
		S/T	0.61	0.54	0.38		0.61	0.53	0.39		0.63	0.55	0.42		1.00	0.57	0.44		1.00	0.60	0.46		1.00	0.65	0.51	
		ΔT	20	18	13		17	16	13		18	16	13		17	16	13		17	16	13		18	17	14	
		kW	1.71	1.87	1.97		2.22	2.22	2.22		2.50	2.50	2.49		2.80	2.80	2.79		3.13	3.13	3.13		3.53	3.53	3.52	
		Amps	6.1	6.6	7.0		8.1	8.1	8.1		9.3	9.3	9.3		10.6	10.6	10.6		12.1	12.1	12.1		13.8	13.8	13.8	
		Hi PR	265	269	274		314	315	317		358	360	362		407	408	410		459	460	462		514	516	517	
		Lo PR	124	125	129		132	133	136		138	140	143		144	145	149		149	151	154		156	158	161	
	1010	MBh	27.5	29.1	29.9		28.4	28.8	29.6		27.7	28.1	28.9		26.4	26.8	27.6		24.8	25.2	26.1		23.4	23.8	24.7	
		S/T	0.69	0.60	0.46		0.68	0.60	0.47		0.71	0.63	0.49		1.00	0.65	0.51		1.00	0.67	0.53		1.00	0.72	0.59	
		ΔT	19	15	12		16	15	12		16	15	12		16	15	12		16	14	11		17	15	12	
		kW	1.88	1.99	1.98		2.24	2.24	2.23		2.51	2.51	2.51		2.81	2.81	2.81		3.15	3.15	3.14		3.54	3.54	3.54	
		Amps	6.7	7.1	7.1		8.2	8.2	8.2		9.4	9.4	9.4		10.7	10.7	10.7		12.2	12.1	12.1		13.9	13.9	13.8	
		Hi PR	271	275	277		316	318	319		361	362	364		409	411	413		462	463	465		517	518	520	
		Lo PR	125	128	131		134	135	138		140	142	145		146	148	151		151	153	156		158	160	163	
	1160	MBh	29.2	29.6	30.4		28.9	29.3	30.2		28.2	28.6	29.4		26.9	27.3	28.2		25.4	25.8	26.6		24.0	24.4	25.2	
		S/T	0.71	0.64	0.50		0.72	0.64	0.51		0.75	0.67	0.53		1.00	0.69	0.55		1.00	0.71	0.57		1.00	0.76	0.62	
		ΔT	15	14	11		15	14	11		16	14	11		15	14	11		15	13	10		16	14	11	
		kW	2.00	2.00	2.00		2.25	2.25	2.24		2.53	2.53	2.52		2.83	2.83	2.82		3.16	3.16	3.16		3.56	3.55	3.55	
		Amps	7.2	7.2	7.1		8.2	8.2	8.2		9.5	9.4	9.4		10.8	10.7	10.7		12.2	12.2	12.2		13.9	13.9	13.9	
		Hi PR	276	277	279		319	320	322		364	365	367		412	413	415		464	465	467		520	521	523	
		Lo PR	129	130	133		136	138	141		143	144	148		148	150	153		154	155	159		161	162	165	
75	860	MBh	25.8	27.5	29.5	30.8	28.0	28.4	29.2	30.5	27.2	27.6	28.5	29.8	26.0	26.4	27.2	28.5	24.4	24.8	25.7	27.0	23.0	23.4	24.2	25.5
		S/T	0.75	0.67	0.52	0.37	0.74	0.66	0.52	0.38	1.00	0.69	0.55	0.40	1.00	0.70	0.57	0.42	1.00	0.73	0.59	0.44	1.00	1.00	0.64	0.50
		ΔT	24	22	16	13	21	19	16	13	21	20	17	13	21	19	16	13	21	19	16	13	22	20	17	14
		kW	1.71	1.87	1.97	1.98	2.22	2.22	2.21	2.23	2.50	2.50	2.49	2.51	2.80	2.80	2.79	2.81	3.13	3.13	3.13	3.15	3.53	3.52	3.52	3.54
		Amps	6.1	6.6	7.0	7.1	8.1	8.1	8.1	8.2	9.3	9.3	9.3	9.4	10.6	10.6	10.6	10.7	12.1	12.1	12.1	12.1	13.8	13.8	13.8	13.8
		Hi PR	265	269	274	279	314	315	317	322	359	360	362	366	407	408	410	415	459	460	462	467	515	516	518	522
		Lo PR	124	125	129	134	132	133	136	142	138	140	143	148	144	145	149	154	149	151	154	159	156	158	161	166
	1010	MBh	27.5	29.1	29.9	31.2	28.4	28.8	29.7	31.0	27.7	28.1	28.9	30.2	26.4	**26.8**	27.7	28.9	24.9	25.3	26.1	27.4	23.4	23.8	24.7	26.0
		S/T	0.83	0.73	0.59	0.45	1.00	0.74	0.60	0.45	1.00	0.76	0.62	0.48	1.00	**0.78**	0.64	0.50	1.00	0.80	0.67	0.52	1.00	1.00	0.72	0.57
		ΔT	23	18	15	12	20	18	15	12	20	18	15	12	20	**18**	15	12	20	18	15	12	21	19	16	13
		kW	1.88	1.99	1.98	2.00	2.24	2.23	2.23	2.25	2.51	2.51	2.51	2.53	2.81	**2.81**	2.81	2.83	3.15	3.15	3.14	3.16	3.54	3.54	3.54	3.55
		Amps	6.6	7.1	7.1	7.2	8.2	8.2	8.2	8.2	9.4	9.4	9.4	9.4	10.7	**10.7**	10.7	10.7	12.1	12.1	12.1	12.2	13.9	13.9	13.8	13.9
		Hi PR	271	275	277	282	317	318	320	324	361	363	365	369	410	**411**	413	418	462	463	465	470	517	519	520	525
		Lo PR	125	128	131	136	134	135	138	144	140	142	145	150	146	**148**	151	156	152	153	156	162	158	160	163	168
	1160	MBh	29.2	29.6	30.5	31.7	29.0	29.4	30.2	31.5	28.2	28.6	29.5	30.8	26.9	27.3	28.2	29.5	25.4	25.8	26.6	27.9	24.0	24.4	25.2	26.5
		S/T	0.84	0.77	0.63	0.48	1.00	0.77	0.64	0.49	1.00	0.80	0.66	0.52	1.00	0.82	0.68	0.54	1.00	1.00	0.70	0.56	1.00	1.00	0.76	0.61
		ΔT	19	17	14	11	19	17	14	11	19	17	14	11	19	17	14	11	19	17	14	11	20	18	15	12
		kW	2.00	2.00	1.99	2.01	2.25	2.25	2.24	2.26	2.53	2.52	2.52	2.54	2.83	2.82	2.82	2.84	3.16	3.16	3.15	3.17	3.55	3.55	3.55	3.57
		Amps	7.2	7.2	7.1	7.2	8.2	8.2	8.2	8.3	9.4	9.4	9.4	9.5	10.7	10.7	10.7	10.8	12.2	12.2	12.2	12.3	13.9	13.9	13.9	14.0
		Hi PR	276	278	280	284	319	320	322	327	364	365	367	372	412	414	415	420	464	466	468	472	520	521	523	528
		Lo PR	129	130	133	139	136	138	141	146	143	144	148	153	148	150	153	158	154	155	159	164	161	162	166	171

IDB = Entering Indoor Dry Bulb Temperature

Shaded area is ACCA (TVA) conditions

kW = Total system power

High and low pressures are measured at the liquid and suction service valves.

Amps = outdoor unit amps (comp.+fan)

Airflow may vary depending on actual ambient conditions and system operation modes.

Expanded Cooling Data — DX6VSS3010A* / DV36FCC14A* (cont.)

			Outdoor Ambient Temperature																							
			65°F				75°F				85°F				95°F				105°F				115°F			
			Entering Indoor Wet Bulb Temperature																							
IDB	Airflow		59	63	67	71	59	63	67	71	59	63	67	71	59	63	67	71	59	63	67	71	59	63	67	71
80	860	MBh	25.9	27.6	29.6	30.9	28.1	28.5	29.4	30.7	27.4	27.8	28.6	29.9	26.1	26.5	27.4	28.7	24.6	25.0	25.8	27.1	23.2	23.5	24.4	25.7
		S/T	1.00	0.80	0.64	0.50	1.00	0.79	0.65	0.50	1.00	0.81	0.67	0.53	1.00	1.00	0.69	0.55	1.00	1.00	0.72	0.57	1.00	1.00	0.77	0.62
		ΔT	28	26	20	17	24	23	20	17	25	23	20	17	24	23	20	17	24	23	20	17	25	24	21	18
		kW	1.71	1.87	1.97	1.99	2.22	2.22	2.22	2.23	2.50	2.50	2.49	2.51	2.80	2.80	2.79	2.81	3.13	3.13	3.13	3.15	3.53	3.52	3.52	3.54
		Amps	6.1	6.6	7.0	7.1	8.1	8.1	8.1	8.2	9.3	9.3	9.3	9.4	10.6	10.6	10.6	10.7	12.1	12.1	12.1	12.1	13.8	13.8	13.8	13.9
		Hi PR	266	270	275	279	314	316	317	322	359	360	362	367	407	409	411	415	460	461	463	467	515	516	518	523
		Lo PR	124	125	129	135	132	134	137	142	139	140	143	149	144	146	149	154	150	151	155	160	157	158	161	167
	1010	MBh	27.7	29.2	30.1	31.4	28.6	29.0	29.8	31.1	27.8	28.2	29.1	30.4	26.6	27.0	**27.8**	29.1	25.0	25.4	26.2	27.5	23.6	24.0	24.8	26.1
		S/T	1.00	0.86	0.72	0.57	1.00	0.86	0.73	0.58	1.00	0.89	0.75	0.61	1.00	1.00	**0.77**	0.63	1.00	1.00	0.79	0.65	1.00	1.00	0.84	0.70
		ΔT	27	22	19	16	23	22	19	16	23	22	19	16	23	22	**19**	16	23	21	18	15	24	22	19	16
		kW	1.88	1.99	1.98	2.00	2.24	2.24	2.23	2.25	2.51	2.51	2.51	2.53	2.81	2.81	**2.81**	2.83	3.15	3.15	3.14	3.16	3.54	3.54	3.54	3.56
		Amps	6.7	7.1	7.1	7.2	8.2	8.2	8.2	8.2	9.4	9.4	9.4	9.4	10.7	10.7	**10.7**	10.8	12.2	12.1	12.1	12.2	13.9	13.9	13.8	13.9
		Hi PR	271	275	277	282	317	318	320	325	362	363	365	370	410	411	**413**	418	462	463	465	470	518	519	521	526
		Lo PR	126	128	131	137	134	136	139	144	141	142	146	151	147	148	**151**	157	152	154	157	162	159	160	164	169
	1160	MBh	29.4	29.8	30.6	31.9	29.1	29.5	30.3	31.6	28.4	28.8	29.6	30.9	27.1	27.5	28.3	29.6	25.5	25.9	26.8	28.1	24.1	24.5	25.4	26.7
		S/T	1.00	0.89	0.76	0.61	1.00	0.90	0.76	0.62	1.00	0.93	0.79	0.64	1.00	1.00	0.81	0.66	1.00	1.00	0.83	0.69	1.00	1.00	0.88	0.74
		ΔT	22	21	18	15	22	21	18	15	23	21	18	15	22	21	18	15	22	20	18	14	23	21	19	15
		kW	2.00	2.00	2.00	2.01	2.25	2.25	2.24	2.26	2.53	2.52	2.52	2.54	2.83	2.82	2.82	2.84	3.16	3.16	3.16	3.17	3.56	3.55	3.55	3.57
		Amps	7.2	7.2	7.1	7.2	8.2	8.2	8.2	8.3	9.4	9.4	9.4	9.5	10.8	10.7	10.7	10.8	12.2	12.2	12.2	12.3	13.9	13.9	13.9	14.0
		Hi PR	277	278	280	285	320	321	323	328	365	366	368	372	413	414	416	421	465	466	468	473	520	522	524	528
		Lo PR	129	131	134	139	137	138	141	147	143	145	148	153	149	151	154	159	154	156	159	164	161	163	166	171
85	860	MBh	26.4	28.1	30.1	31.4	28.6	29.0	29.9	31.1	27.9	28.3	29.1	30.4	26.6	27.0	27.8	29.1	25.0	25.4	26.3	27.6	23.6	24.0	24.9	26.2
		S/T	1.00	0.91	0.75	0.60	1.00	1.00	0.75	0.61	1.00	1.00	0.78	0.63	1.00	1.00	0.80	0.65	1.00	1.00	0.82	0.67	1.00	1.00	1.00	0.73
		ΔT	32	30	23	20	28	26	23	20	28	26	23	20	28	26	23	20	27	26	23	20	28	27	24	21
		kW	1.72	1.87	1.97	1.99	2.23	2.22	2.22	2.24	2.50	2.50	2.50	2.52	2.80	2.80	2.80	2.82	3.14	3.14	3.13	3.15	3.53	3.53	3.53	3.54
		Amps	6.1	6.6	7.0	7.1	8.1	8.1	8.1	8.2	9.3	9.3	9.3	9.4	10.7	10.6	10.6	10.7	12.1	12.1	12.1	12.2	13.8	13.8	13.8	13.9
		Hi PR	267	271	276	281	316	317	319	323	360	362	364	368	409	410	412	417	461	462	464	469	516	518	519	524
		Lo PR	126	127	131	136	134	136	139	144	141	142	145	151	146	148	151	156	152	153	156	162	159	160	163	169
	1010	MBh	28.1	29.7	30.5	31.8	29.0	29.4	30.3	31.6	28.3	28.7	29.5	30.8	27.0	27.4	28.3	29.6	25.5	25.9	26.7	28.0	24.1	24.5	25.3	26.6
		S/T	1.00	0.96	0.82	0.68	1.00	1.00	0.83	0.68	1.00	1.00	0.85	0.71	1.00	1.00	0.87	0.73	1.00	1.00	1.00	0.75	1.00	1.00	1.00	0.80
		ΔT	30	25	22	19	26	25	22	19	27	25	22	19	26	25	22	19	26	25	22	19	27	26	23	20
		kW	1.89	1.99	1.99	2.01	2.24	2.24	2.24	2.25	2.52	2.52	2.51	2.53	2.82	2.82	2.81	2.83	3.15	3.15	3.15	3.17	3.55	3.55	3.54	3.56
		Amps	6.7	7.1	7.1	7.2	8.2	8.2	8.2	8.3	9.4	9.4	9.4	9.5	10.7	10.7	10.7	10.8	12.2	12.2	12.1	12.2	13.9	13.9	13.9	13.9
		Hi PR	273	277	279	283	318	320	321	326	363	364	366	371	411	413	415	419	464	465	467	471	519	520	522	527
		Lo PR	128	130	133	139	136	138	141	146	143	144	148	153	148	150	153	158	154	155	159	164	161	162	166	171
	1160	MBh	29.8	30.2	31.1	32.4	29.6	30.0	30.8	32.1	28.8	29.2	30.1	31.4	27.6	28.0	28.8	30.1	26.0	26.4	27.3	28.6	24.6	25.0	25.8	27.1
		S/T	1.00	1.00	0.86	0.71	1.00	1.00	0.87	0.72	1.00	1.00	0.89	0.75	1.00	1.00	0.91	0.77	1.00	1.00	1.00	0.79	1.00	1.00	1.00	0.84
		ΔT	25	24	21	18	25	24	21	18	26	24	21	18	25	24	21	18	25	24	21	18	26	25	22	19
		kW	2.01	2.00	2.00	2.02	2.25	2.25	2.25	2.27	2.53	2.53	2.53	2.54	2.83	2.83	2.83	2.84	3.17	3.16	3.16	3.18	3.56	3.56	3.55	3.57
		Amps	7.2	7.2	7.2	7.2	8.3	8.3	8.2	8.3	9.5	9.5	9.4	9.5	10.8	10.8	10.7	10.8	12.2	12.2	12.2	12.3	13.9	13.9	13.9	14.0
		Hi PR	278	279	281	286	321	322	324	329	366	367	369	374	414	415	417	422	466	467	469	474	522	523	525	530
		Lo PR	131	133	136	141	139	140	143	149	145	147	150	155	151	152	156	161	156	158	161	166	163	165	168	173

IDB = Entering Indoor Dry Bulb Temperature

Shaded area is AHRI conditions

kW = Total system power

High and low pressures are measured at the liquid and suction service valves.

Amps = outdoor unit amps (comp.+fan)

Airflow may vary depending on actual ambient conditions and system operation modes.

EXPANDED COOLING DATA — DX6VSS3610A* / DV36FECC14A*

			Outdoor Ambient Temperature																							
			65°F				75°F				85°F				95°F				105°F				115°F			
			Entering Indoor Wet Bulb Temperature																							
IDB	Airflow		59	63	67	71	59	63	67	71	59	63	67	71	59	63	67	71	59	63	67	71	59	63	67	71
70	1070	MBh	30.2	32.2	35.6		33.8	34.3	35.3		32.9	33.4	34.4		31.4	31.8	32.9		29.5	30.0	31.0		27.5	27.9	28.9	
		S/T	0.63	0.54	0.39		0.61	0.53	0.39		0.64	0.56	0.42		1.00	0.58	0.44		1.00	0.60	0.46		1.00	0.68	0.53	
		ΔT	20	18	13		17	15	13		17	16	13		17	15	13		17	15	12		21	19	16	
		kW	2.21	2.38	2.71		3.06	3.06	3.05		3.44	3.44	3.43		3.85	3.85	3.84		4.31	4.31	4.30		4.79	4.79	4.79	
		Amps	7.7	8.4	9.4		10.9	10.9	10.9		12.6	12.6	12.6		14.4	14.4	14.4		16.4	16.4	16.3		18.5	18.5	18.5	
		Hi PR	275	278	281		322	323	325		368	369	371		418	419	421		471	472	474		532	533	535	
		Lo PR	124	124	128		131	133	136		138	139	142		143	145	148		149	150	153		153	155	158	
	1260	MBh	32.2	35.1	36.1		34.3	34.8	35.8		33.4	33.9	34.9		31.9	32.4	33.4		30.0	30.5	31.5		28.0	28.5	29.5	
		S/T	0.70	0.61	0.47		0.69	0.61	0.47		0.72	0.64	0.50		1.00	0.66	0.52		1.00	0.68	0.54		1.00	0.75	0.61	
		ΔT	18	14	11		16	14	11		16	14	12		16	14	11		16	14	11		19	18	14	
		kW	2.40	2.74	2.73		3.08	3.08	3.07		3.46	3.46	3.45		3.87	3.87	3.86		4.33	4.33	4.32		4.81	4.81	4.81	
		Amps	8.5	9.6	9.5		11.0	11.0	11.0		12.7	12.7	12.7		14.5	14.5	14.4		16.5	16.5	16.4		18.6	18.6	18.5	
		Hi PR	280	282	284		325	326	328		371	372	374		421	422	424		474	475	477		535	536	538	
		Lo PR	125	127	130		133	135	138		140	141	145		145	147	150		151	152	156		155	157	160	
	1450	MBh	35.3	35.8	36.8		35.0	35.5	36.5		34.1	34.6	35.6		32.6	33.0	34.1		30.7	31.2	32.2		28.6	29.1	30.1	
		S/T	0.72	0.65	0.51		0.73	0.65	0.51		0.76	0.68	0.54		1.00	0.70	0.56		1.00	0.72	0.58		1.00	0.79	0.65	
		ΔT	15	13	10		15	13	10		15	14	11		15	13	10		15	13	10		18	17	13	
		kW	2.76	2.76	2.75		3.10	3.10	3.09		3.48	3.47	3.47		3.89	3.89	3.88		4.35	4.34	4.34		4.83	4.83	4.82	
		Amps	9.6	9.6	9.6		11.1	11.1	11.1		12.8	12.8	12.7		14.6	14.5	14.5		16.6	16.5	16.5		18.7	18.6	18.6	
		Hi PR	284	285	287		328	329	331		374	375	377		423	425	427		477	478	480		537	539	541	
		Lo PR	128	130	133		136	137	140		142	144	147		148	149	153		153	155	158		158	159	162	
75	1070	MBh	30.2	32.2	35.6	37.2	33.8	34.3	35.3	36.9	32.9	33.4	34.4	36.0	31.4	31.9	32.9	34.5	29.5	30.0	31.0	32.6	27.5	28.0	29.0	27.3
		S/T	0.77	0.68	0.52	0.37	0.74	0.67	0.53	0.38	1.00	0.69	0.55	0.41	1.00	0.71	0.57	0.43	1.00	0.74	0.60	0.45	1.00	1.00	0.67	0.52
		ΔT	23	22	16	13	20	19	16	13	21	19	16	13	20	19	16	13	20	19	16	13	25	23	20	16
		kW	2.20	2.38	2.71	2.73	3.06	3.05	3.05	3.07	3.44	3.43	3.43	3.45	3.85	3.84	3.84	3.86	4.31	4.30	4.30	4.32	4.79	4.79	4.78	3.93
		Amps	7.7	8.4	9.4	9.5	10.9	10.9	10.9	11.0	12.6	12.6	12.6	12.7	14.4	14.4	14.3	14.5	16.4	16.4	16.3	16.4	18.5	18.5	18.4	15.2
		Hi PR	275	278	281	286	322	324	325	330	368	370	372	376	418	419	421	426	471	473	475	479	532	533	535	530
		Lo PR	124	124	128	134	131	133	136	141	138	139	142	148	143	145	148	153	149	150	153	159	153	155	158	166
	1260	MBh	32.3	35.1	36.2	37.7	34.3	34.8	35.9	37.4	33.5	33.9	35.0	36.5	31.9	**32.4**	33.4	35.0	30.0	30.5	31.5	33.1	28.0	28.5	29.5	27.8
		S/T	0.84	0.74	0.60	0.45	1.00	0.74	0.61	0.46	1.00	0.77	0.63	0.48	1.00	**0.79**	0.65	0.50	1.00	0.81	0.67	0.53	1.00	1.00	0.75	0.60
		ΔT	22	18	15	12	19	18	15	12	19	18	15	12	19	**18**	15	12	19	17	15	12	23	22	18	14
		kW	2.40	2.74	2.73	2.76	3.08	3.08	3.07	3.10	3.46	3.46	3.45	3.48	3.87	**3.87**	3.86	3.89	4.33	4.33	4.32	4.35	4.81	4.81	4.80	3.95
		Amps	8.5	9.5	9.5	9.6	11.0	11.0	11.0	11.1	12.7	12.7	12.6	12.8	14.5	**14.5**	14.4	14.5	16.5	16.5	16.4	16.5	18.6	18.6	18.5	15.3
		Hi PR	280	282	284	289	325	326	328	333	371	372	374	379	421	**422**	424	429	474	475	477	482	535	536	538	532
		Lo PR	125	127	130	136	133	135	138	143	140	141	145	150	145	**147**	150	155	151	152	156	161	155	157	160	168
	1450	MBh	35.3	35.8	36.8	38.4	35.0	35.5	36.5	38.1	34.1	34.6	35.6	37.2	32.6	33.1	34.1	35.6	30.7	31.2	32.2	33.8	28.6	29.1	30.1	28.4
		S/T	0.86	0.78	0.64	0.49	1.00	0.78	0.64	0.50	1.00	0.81	0.67	0.52	1.00	0.83	0.69	0.54	1.00	1.00	0.71	0.57	1.00	1.00	0.79	0.64
		ΔT	18	17	14	11	18	17	14	11	19	17	14	11	18	17	14	11	18	17	14	11	22	21	17	13
		kW	2.76	2.75	2.75	2.77	3.10	3.09	3.09	3.11	3.48	3.47	3.47	3.49	3.89	3.88	3.88	3.90	4.35	4.34	4.34	4.36	4.83	4.83	4.82	3.96
		Amps	9.6	9.6	9.6	9.7	11.1	11.1	11.1	11.2	12.8	12.8	12.7	12.8	14.5	14.5	14.5	14.6	16.5	16.5	16.5	16.6	18.6	18.6	18.6	15.4
		Hi PR	284	285	287	292	328	329	331	336	374	375	377	382	424	425	427	432	477	478	480	485	538	539	541	535
		Lo PR	128	130	133	138	136	137	140	146	142	144	147	152	148	149	153	158	153	155	158	163	158	159	162	171

IDB = Entering Indoor Dry Bulb Temperature

Shaded area is ACCA (TVA) conditions

kW = Total system power

High and low pressures are measured at the liquid and suction service valves.

Amps = outdoor unit amps (comp.+fan)

Airflow may vary depending on actual ambient conditions and system operation modes.

EXPANDED COOLING DATA — DX6VSS3610A* / DV36FCC14A* (CONT.)

			Outdoor Ambient Temperature																							
			65°F				75°F				85°F				95°F				105°F				115°F			
			Entering Indoor Wet Bulb Temperature																							
IDB	Airflow		59	63	67	71	59	63	67	71	59	63	67	71	59	63	67	71	59	63	67	71	59	63	67	71
80	1070	MBh	30.4	32.4	35.8	37.4	34.0	34.5	35.5	37.1	33.1	33.6	34.6	36.2	31.6	32.0	33.1	34.6	29.7	30.2	31.2	32.8	27.7	28.1	29.1	27.5
		S/T	1.00	0.81	0.65	0.50	1.00	0.80	0.66	0.51	1.00	0.82	0.68	0.54	1.00	1.00	0.70	0.56	1.00	1.00	0.72	0.58	1.00	1.00	0.80	0.66
		ΔT	27	26	19	16	24	22	19	16	24	22	20	17	24	22	19	16	24	22	19	16	29	27	24	20
		kW	2.21	2.38	2.71	2.74	3.06	3.06	3.05	3.08	3.44	3.44	3.43	3.46	3.85	3.85	3.84	3.87	4.31	4.31	4.30	4.33	4.79	4.79	4.78	3.93
		Amps	7.7	8.4	9.4	9.5	10.9	10.9	10.9	11.0	12.6	12.6	12.6	12.7	14.4	14.4	14.3	14.5	16.4	16.4	16.3	16.5	18.5	18.5	18.5	15.2
		Hi PR	275	279	282	287	323	324	326	331	369	370	372	377	418	420	422	426	472	473	475	480	533	534	536	530
		Lo PR	124	125	129	134	132	133	136	142	138	140	143	148	144	145	149	154	149	151	154	159	154	155	158	167
	1260	MBh	32.4	35.3	36.3	37.9	34.5	35.0	36.0	37.6	33.6	34.1	35.1	36.7	32.1	32.6	**33.6**	35.2	30.2	30.7	31.7	33.3	28.2	28.6	29.7	27.9
		S/T	1.00	0.87	0.73	0.58	1.00	0.87	0.73	0.59	1.00	0.90	0.76	0.61	1.00	1.00	**0.78**	0.63	1.00	1.00	0.80	0.66	1.00	1.00	0.88	0.74
		ΔT	26	21	18	15	23	21	18	15	23	21	18	15	23	21	**18**	15	22	21	18	15	27	26	22	18
		kW	2.40	2.74	2.73	2.76	3.08	3.08	3.07	3.10	3.46	3.46	3.45	3.48	3.87	3.87	**3.86**	3.89	4.33	4.33	4.32	4.35	4.81	4.81	4.81	3.95
		Amps	8.5	9.6	9.5	9.6	11.0	11.0	11.0	11.1	12.7	12.7	12.7	12.8	14.5	14.5	**14.4**	14.6	16.5	16.5	16.4	16.6	18.6	18.6	18.5	15.3
		Hi PR	280	283	285	290	326	327	329	334	372	373	375	380	421	423	**425**	429	475	476	478	483	535	537	539	533
		Lo PR	125	128	131	136	134	135	139	144	140	142	145	150	146	148	**151**	156	152	153	156	161	156	157	160	169
	1450	MBh	35.5	36.0	37.0	38.6	35.2	35.7	36.7	38.3	34.3	34.8	35.8	37.4	32.8	33.2	34.3	35.8	30.9	31.4	32.4	33.9	28.8	29.3	30.3	28.5
		S/T	1.00	0.91	0.77	0.62	1.00	0.91	0.77	0.63	1.00	0.94	0.80	0.65	1.00	1.00	0.82	0.67	1.00	1.00	0.84	0.70	1.00	1.00	0.92	0.78
		ΔT	22	20	17	14	22	20	17	14	22	20	17	14	22	20	17	14	22	20	17	14	26	25	21	17
		kW	2.76	2.75	2.75	2.77	3.10	3.09	3.09	3.12	3.48	3.47	3.47	3.49	3.89	3.89	3.88	3.91	4.35	4.34	4.34	4.36	4.83	4.83	4.82	3.97
		Amps	9.6	9.6	9.6	9.7	11.1	11.1	11.1	11.2	12.8	12.8	12.7	12.8	14.6	14.5	14.5	14.6	16.6	16.5	16.5	16.6	18.7	18.6	18.6	15.4
		Hi PR	284	286	288	293	328	330	332	336	375	376	378	383	424	425	427	432	478	479	481	486	538	539	541	536
		Lo PR	129	130	133	139	136	138	141	146	143	144	148	153	148	150	153	158	154	156	159	164	158	160	163	171
85	1070	MBh	30.9	32.9	36.4	37.9	34.6	35.1	36.1	37.6	33.7	34.2	35.2	36.7	32.1	32.6	33.6	35.2	30.3	30.7	31.8	33.3	28.2	28.7	29.7	28.0
		S/T	1.00	0.91	0.75	0.61	1.00	0.90	0.76	0.61	1.00	1.00	0.79	0.64	1.00	1.00	0.81	0.66	1.00	1.00	0.83	0.68	1.00	1.00	1.00	0.77
		ΔT	31	30	22	19	27	25	22	19	27	26	23	20	27	25	22	19	27	25	22	19	32	31	27	23
		kW	2.21	2.39	2.72	2.74	3.06	3.06	3.06	3.08	3.44	3.44	3.44	3.46	3.86	3.85	3.85	3.87	4.31	4.31	4.31	4.33	4.80	4.80	4.79	3.94
		Amps	7.7	8.4	9.5	9.6	11.0	11.0	10.9	11.1	12.6	12.6	12.6	12.7	14.4	14.4	14.4	14.5	16.4	16.4	16.4	16.5	18.5	18.5	18.5	15.3
		Hi PR	277	280	283	288	324	325	327	332	370	371	373	378	420	421	423	428	473	474	476	481	534	535	537	531
		Lo PR	126	127	131	136	134	135	138	143	140	142	145	150	146	147	150	156	151	153	156	161	156	157	160	168
	1260	MBh	33.0	35.9	36.9	38.5	35.1	35.6	36.6	38.2	34.2	34.7	35.7	37.3	32.7	33.2	34.2	35.7	30.8	31.3	32.3	33.9	28.7	29.2	30.2	28.5
		S/T	1.00	0.97	0.83	0.69	1.00	1.00	0.84	0.69	1.00	1.00	0.86	0.72	1.00	1.00	0.88	0.74	1.00	1.00	0.91	0.76	1.00	1.00	1.00	0.84
		ΔT	30	24	21	18	26	24	21	18	26	24	21	18	26	24	21	18	26	24	21	18	31	29	26	22
		kW	2.41	2.74	2.74	2.76	3.09	3.08	3.08	3.10	3.47	3.46	3.46	3.48	3.88	3.87	3.87	3.89	4.34	4.33	4.33	4.35	4.82	4.82	4.81	3.96
		Amps	8.5	9.6	9.6	9.7	11.1	11.1	11.0	11.1	12.7	12.7	12.7	12.8	14.5	14.5	14.5	14.6	16.5	16.5	16.5	16.6	18.6	18.6	18.6	15.3
		Hi PR	282	284	286	291	327	328	330	335	373	374	376	381	423	424	426	431	476	477	479	484	537	538	540	534
		Lo PR	127	130	133	138	136	137	140	146	142	144	147	152	148	149	153	158	153	155	158	163	158	159	162	171
	1450	MBh	36.1	36.6	37.6	39.1	35.8	36.2	37.3	38.8	34.9	35.4	36.4	37.9	33.3	33.8	34.8	36.4	31.5	31.9	33.0	34.5	29.4	29.9	30.9	29.0
		S/T	1.00	1.00	0.87	0.72	1.00	1.00	0.88	0.73	1.00	1.00	0.90	0.76	1.00	1.00	0.92	0.78	1.00	1.00	1.00	0.80	1.00	1.00	1.00	0.88
		ΔT	25	23	20	17	25	23	20	17	25	23	21	18	25	23	20	17	25	23	20	17	30	28	25	21
		kW	2.76	2.76	2.76	2.78	3.10	3.10	3.10	3.12	3.48	3.48	3.48	3.50	3.89	3.89	3.89	3.91	4.35	4.35	4.35	4.37	4.84	4.84	4.83	3.97
		Amps	9.7	9.7	9.6	9.7	11.1	11.1	11.1	11.2	12.8	12.8	12.8	12.9	14.6	14.6	14.5	14.7	16.6	16.6	16.5	16.7	18.7	18.7	18.6	15.4
		Hi PR	286	287	289	294	330	331	333	338	376	377	379	384	425	427	429	433	479	480	482	487	539	541	543	537
		Lo PR	131	132	135	141	138	140	143	148	145	146	149	155	150	152	155	160	156	157	161	166	160	161	165	173

IDB = Entering Indoor Dry Bulb Temperature

Shaded area is AHRI conditions

kW = Total system power

High and low pressures are measured at the liquid and suction service valves.

Amps = outdoor unit amps (comp.+fan)

Airflow may vary depending on actual ambient conditions and system operation modes.

Expanded Cooling Data — DX6VSS4210A* / DV48FCD14A*

			Outdoor Ambient Temperature																							
			65°F				75°F				85°F				95°F				105°F				115°F			
			Entering Indoor Wet Bulb Temperature																							
IDB	Airflow		59	63	67	71	59	63	67	71	59	63	67	71	59	63	67	71	59	63	67	71	59	63	67	71
70	1120	MBh	30.7	38.1	40.9		39.7	40.3	41.5		38.7	39.2	40.4		36.9	37.4	38.6		34.7	35.2	36.4		30.6	31.1	32.3	
		S/T	0.60	0.50	0.37		0.59	0.51	0.38		0.61	0.54	0.40		0.63	0.56	0.42		0.65	0.58	0.44		1.00	0.62	0.49	
		ΔT	20	19	15		19	18	14		20	18	14		19	18	14		19	17	14		22	20	16	
		kW	2.17	2.85	3.05		3.62	3.61	3.61		4.10	4.10	4.09		4.63	4.63	4.62		5.22	5.22	5.21		5.26	5.25	5.25	
		Amps	8.2	11.0	11.7		14.3	14.2	14.2		16.4	16.4	16.3		18.7	18.7	18.6		21.2	21.2	21.2		21.4	21.4	21.4	
		Hi PR	252	264	269		311	312	314		355	356	358		403	404	406		455	456	458		500	501	503	
		Lo PR	119	116	118		124	125	128		130	131	134		135	136	139		140	142	145		144	146	149	
	1320	MBh	33.8	40.3	42.5		40.4	40.9	42.1		39.3	39.9	41.1		37.5	38.1	39.3		35.3	35.9	37.1		31.2	31.7	32.8	
		S/T	0.67	0.57	0.45		0.66	0.59	0.45		0.69	0.61	0.48		0.71	0.63	0.50		0.73	0.65	0.52		1.00	0.70	0.56	
		ΔT	19	18	13		18	16	13		18	16	13		18	16	13		18	16	13		20	18	15	
		kW	2.42	3.08	3.20		3.64	3.64	3.63		4.13	4.13	4.12		4.66	4.65	4.65		5.25	5.24	5.24		5.28	5.28	5.27	
		Amps	9.2	11.9	12.4		14.4	14.4	14.3		16.5	16.5	16.4		18.8	18.8	18.7		21.3	21.3	21.3		21.5	21.5	21.5	
		Hi PR	259	270	274		314	315	317		358	359	361		406	407	409		457	459	460		503	504	506	
		Lo PR	119	117	123		126	127	130		132	133	136		137	139	141		142	144	147		146	148	151	
	1520	MBh	38.8	41.1	43.3		41.1	41.7	42.9		40.1	40.7	41.9		38.3	38.9	40.1		36.1	36.6	37.8		31.9	32.4	33.5	
		S/T	0.69	0.61	0.49		0.70	0.63	0.49		0.73	0.65	0.52		0.75	0.67	0.54		1.00	0.69	0.56		1.00	0.73	0.60	
		ΔT	18	17	12		17	15	12		17	15	12		17	15	12		17	15	12		19	17	14	
		kW	2.90	3.10	3.22		3.67	3.66	3.66		4.15	4.15	4.14		4.68	4.68	4.67		5.27	5.27	5.26		5.30	5.30	5.29	
		Amps	11.2	12.0	12.5		14.5	14.5	14.4		16.6	16.6	16.5		18.9	18.9	18.8		21.4	21.4	21.4		21.6	21.6	21.6	
		Hi PR	268	272	277		316	317	319		361	362	364		408	410	412		460	461	463		505	506	508	
		Lo PR	119	119	125		128	129	132		134	136	139		139	141	144		145	146	149		148	150	153	
75	1120	MBh	30.7	38.1	40.9	43.7	39.7	40.3	41.5	43.4	38.7	39.3	40.5	42.3	36.9	37.5	38.7	40.5	34.7	35.3	36.5	38.3	30.6	31.2	32.3	32.4
		S/T	0.73	0.63	0.50	0.36	0.72	0.64	0.51	0.37	0.74	0.67	0.53	0.39	1.00	0.68	0.55	0.41	1.00	0.71	0.57	0.43	1.00	0.75	0.62	0.48
		ΔT	24	23	20	15	23	21	18	15	23	22	18	15	23	21	18	15	23	21	18	14	26	24	20	17
		kW	2.16	2.85	3.04	3.20	3.61	3.61	3.60	3.64	4.10	4.10	4.09	4.12	4.63	4.62	4.62	4.65	5.22	5.21	5.21	5.24	5.25	5.25	5.24	4.89
		Amps	8.2	11.0	11.7	12.4	14.2	14.2	14.2	14.3	16.4	16.3	16.3	16.5	18.7	18.6	18.6	18.8	21.2	21.2	21.2	21.3	21.4	21.4	21.4	19.9
		Hi PR	253	265	269	276	311	312	314	319	355	357	358	363	403	404	406	411	455	456	458	463	500	501	503	502
		Lo PR	119	116	118	126	124	125	128	133	130	131	134	139	135	136	139	144	140	142	145	150	144	146	149	155
	1320	MBh	33.9	40.4	42.5	44.3	40.4	40.9	42.1	44.0	39.3	39.9	41.1	42.9	37.5	**38.1**	39.3	41.1	35.3	35.9	37.1	38.9	31.2	31.7	32.8	33.0
		S/T	0.80	0.70	0.58	0.44	0.79	0.72	0.58	0.44	0.82	0.74	0.61	0.47	1.00	**0.76**	0.63	0.49	1.00	0.78	0.65	0.51	1.00	0.82	0.69	0.56
		ΔT	23	22	17	13	22	20	17	13	22	20	17	14	22	**20**	17	13	22	20	17	13	25	23	19	15
		kW	2.42	3.08	3.19	3.23	3.64	3.64	3.63	3.66	4.13	4.13	4.12	4.15	4.66	**4.65**	4.64	4.68	5.24	5.24	5.23	5.27	5.28	5.27	5.27	4.91
		Amps	9.2	11.9	12.4	12.6	14.4	14.4	14.3	14.5	16.5	16.5	16.4	16.6	18.8	**18.8**	18.7	18.9	21.3	21.3	21.3	21.4	21.5	21.5	21.5	20.0
		Hi PR	259	270	274	279	314	315	317	321	358	359	361	366	406	**407**	409	414	458	459	461	465	503	504	506	505
		Lo PR	119	117	123	128	126	127	130	135	132	133	136	141	137	**139**	142	146	142	144	147	152	146	148	151	157
	1520	MBh	38.9	41.1	43.3	45.1	41.2	41.7	42.9	44.8	40.1	40.7	41.9	43.7	38.3	38.9	40.1	41.9	36.1	36.7	37.9	39.7	31.9	32.4	33.6	33.7
		S/T	0.81	0.74	0.61	0.47	0.83	0.75	0.62	0.48	1.00	0.78	0.64	0.50	1.00	0.80	0.66	0.52	1.00	0.82	0.69	0.54	1.00	0.86	0.73	0.60
		ΔT	23	21	16	12	21	19	16	12	21	19	16	13	21	19	16	12	21	19	15	12	23	21	18	14
		kW	2.90	3.10	3.22	3.25	3.66	3.66	3.65	3.69	4.15	4.15	4.14	4.17	4.68	4.67	4.67	4.70	5.27	5.26	5.26	5.29	5.30	5.29	5.29	4.93
		Amps	11.2	12.0	12.5	12.7	14.5	14.5	14.4	14.6	16.6	16.6	16.5	16.7	18.9	18.9	18.8	19.0	21.4	21.4	21.4	21.5	21.6	21.6	21.6	20.0
		Hi PR	269	273	277	282	316	318	319	324	361	362	364	369	409	410	412	416	460	461	463	468	505	506	508	508
		Lo PR	119	119	125	130	128	129	132	137	134	136	139	144	139	141	144	149	145	146	149	154	149	150	153	159

IDB = Entering Indoor Dry Bulb Temperature

Shaded area is ACCA (TVA) conditions

kW = Total system power

High and low pressures are measured at the liquid and suction service valves.

Amps = outdoor unit amps (comp.+fan)

Airflow may vary depending on actual ambient conditions and system operation modes.

EXPANDED COOLING DATA — DX6VSS4210A* / DV48FCD14A* (CONT.)

			Outdoor Ambient Temperature																							
			65°F				75°F				85°F				95°F				105°F				115°F			
			Entering Indoor Wet Bulb Temperature																							
IDB	Airflow		59	63	67	71	59	63	67	71	59	63	67	71	59	63	67	71	59	63	67	71	59	63	67	71
80	1120	MBh	30.9	38.3	41.1	43.9	40.0	40.5	41.7	43.6	38.9	39.5	40.7	42.5	37.1	37.7	38.9	40.7	34.9	35.5	36.7	38.5	30.8	31.3	32.5	32.6
		S/T	0.86	0.75	0.62	0.48	1.00	0.76	0.63	0.49	1.00	0.79	0.66	0.51	1.00	0.81	0.67	0.53	1.00	0.83	0.70	0.56	1.00	1.00	0.74	0.60
		ΔT	28	27	24	19	27	25	22	19	27	26	22	19	27	25	22	19	27	25	22	18	30	28	25	21
		kW	2.17	2.85	3.05	3.20	3.62	3.61	3.61	3.64	4.10	4.10	4.09	4.13	4.63	4.63	4.62	4.65	5.22	5.22	5.21	5.24	5.26	5.25	5.25	4.89
		Amps	8.2	11.0	11.7	12.5	14.3	14.2	14.2	14.4	16.4	16.4	16.3	16.5	18.7	18.6	18.6	18.8	21.2	21.2	21.2	21.3	21.4	21.4	21.4	19.9
		Hi PR	253	265	270	277	311	313	315	319	356	357	359	364	404	405	407	411	455	456	458	463	501	502	504	503
		Lo PR	120	117	119	126	124	126	128	133	130	132	135	140	136	137	140	145	141	142	145	150	145	146	149	156
	1320	MBh	34.0	40.6	42.7	44.5	40.6	41.2	42.4	44.2	39.5	40.1	41.3	43.1	37.7	38.3	**39.5**	41.3	35.5	36.1	37.3	39.1	31.4	31.9	33.0	33.2
		S/T	0.92	0.82	0.70	0.56	1.00	0.84	0.71	0.57	1.00	0.86	0.73	0.59	1.00	0.88	**0.75**	0.61	1.00	0.91	0.77	0.63	1.00	1.00	0.81	0.68
		ΔT	27	26	21	17	26	24	21	17	26	24	21	18	26	24	**21**	17	26	24	20	17	29	27	23	19
		kW	2.42	3.08	3.20	3.23	3.64	3.64	3.63	3.67	4.13	4.13	4.12	4.15	4.66	4.65	**4.65**	4.68	5.25	5.24	5.24	5.27	5.28	5.28	5.27	4.91
		Amps	9.2	11.9	12.4	12.6	14.4	14.4	14.3	14.5	16.5	16.5	16.4	16.6	18.8	18.8	**18.7**	18.9	21.3	21.3	21.3	21.4	21.5	21.5	21.5	20.0
		Hi PR	260	271	275	280	314	315	317	322	359	360	362	366	407	408	**410**	414	458	459	461	466	503	504	506	506
		Lo PR	120	118	123	128	126	128	131	136	132	134	137	142	138	139	**142**	147	143	144	147	152	147	148	151	158
	1520	MBh	39.1	41.3	43.5	45.3	41.4	41.9	43.1	45.0	40.3	40.9	42.1	43.9	38.5	39.1	40.3	42.1	36.3	36.9	38.1	39.9	32.1	32.6	33.7	33.9
		S/T	0.93	0.86	0.74	0.60	1.00	0.88	0.74	0.60	1.00	0.90	0.77	0.63	1.00	0.92	0.79	0.65	1.00	1.00	0.81	0.67	1.00	1.00	0.85	0.72
		ΔT	27	25	20	16	25	23	20	16	25	23	20	16	25	23	20	16	24	23	19	16	28	26	22	18
		kW	2.90	3.10	3.22	3.25	3.67	3.66	3.66	3.69	4.15	4.15	4.14	4.18	4.68	4.68	4.67	4.70	5.27	5.27	5.26	5.29	5.30	5.30	5.29	4.93
		Amps	11.2	12.0	12.5	12.7	14.5	14.5	14.4	14.6	16.6	16.6	16.5	16.7	18.9	18.9	18.8	19.0	21.4	21.4	21.4	21.5	21.6	21.6	21.6	20.1
		Hi PR	269	273	278	282	317	318	320	325	361	363	364	369	409	410	412	417	461	462	464	469	506	507	509	508
		Lo PR	119	120	126	131	128	130	133	138	135	136	139	144	140	141	144	149	145	147	150	155	149	150	153	160
85	1120	MBh	31.4	38.9	41.8	44.6	40.6	41.2	42.4	44.2	39.6	40.2	41.4	43.2	37.8	38.3	39.5	41.4	35.6	36.1	37.3	39.2	31.4	32.0	33.1	33.2
		S/T	1.00	0.85	0.72	0.58	1.00	0.86	0.73	0.59	1.00	0.89	0.76	0.61	1.00	1.00	0.77	0.63	1.00	1.00	0.80	0.66	1.00	1.00	0.84	0.71
		ΔT	32	31	28	22	31	29	25	22	31	29	26	22	31	29	25	22	30	29	25	22	34	32	28	25
		kW	2.17	2.86	3.05	3.21	3.62	3.62	3.61	3.65	4.11	4.11	4.10	4.13	4.64	4.63	4.63	4.66	5.23	5.22	5.22	5.25	5.26	5.26	5.25	4.89
		Amps	8.2	11.0	11.8	12.5	14.3	14.3	14.2	14.4	16.4	16.4	16.4	16.5	18.7	18.7	18.7	18.8	21.3	21.2	21.2	21.4	21.4	21.4	21.4	19.9
		Hi PR	254	266	271	278	313	314	316	320	357	358	360	365	405	406	408	413	457	458	460	464	502	503	505	504
		Lo PR	121	118	120	128	126	127	130	135	132	133	136	141	137	139	142	147	142	144	147	152	147	148	151	157
	1320	MBh	34.6	41.2	43.4	45.2	41.3	41.8	43.0	44.9	40.2	40.8	42.0	43.8	38.4	39.0	40.2	42.0	36.2	36.8	38.0	39.8	32.0	32.6	33.7	33.8
		S/T	1.00	0.92	0.80	0.66	1.00	0.94	0.81	0.67	1.00	1.00	0.83	0.69	1.00	1.00	0.85	0.71	1.00	1.00	0.87	0.73	1.00	1.00	0.91	0.78
		ΔT	31	30	24	21	29	27	24	21	29	28	24	21	29	27	24	21	29	27	24	20	32	31	27	23
		kW	2.43	3.09	3.21	3.24	3.65	3.65	3.64	3.67	4.14	4.14	4.13	4.16	4.67	4.66	4.66	4.69	5.25	5.25	5.24	5.28	5.29	5.28	5.28	4.92
		Amps	9.3	11.9	12.5	12.6	14.4	14.4	14.4	14.5	16.5	16.5	16.5	16.6	18.8	18.8	18.8	18.9	21.4	21.4	21.3	21.5	21.5	21.5	21.5	20.0
		Hi PR	261	272	276	281	316	317	319	323	360	361	363	368	408	409	411	416	459	461	462	467	504	506	507	507
		Lo PR	122	119	125	130	128	129	132	137	134	136	139	144	139	141	144	149	145	146	149	154	149	150	153	159
	1520	MBh	39.7	42.0	44.2	46.0	42.0	42.6	43.8	45.6	41.0	41.6	42.8	44.6	39.2	39.8	41.0	42.8	37.0	37.6	38.8	40.6	32.7	33.3	34.4	34.5
		S/T	1.00	0.96	0.84	0.70	1.00	0.98	0.84	0.70	1.00	1.00	0.87	0.73	1.00	1.00	0.89	0.75	1.00	1.00	0.91	0.77	1.00	1.00	0.95	0.82
		ΔT	30	29	23	20	28	26	23	20	28	27	23	20	28	26	23	20	28	26	23	19	31	29	26	22
		kW	2.91	3.11	3.23	3.26	3.68	3.67	3.66	3.70	4.16	4.16	4.15	4.18	4.69	4.69	4.68	4.71	5.28	5.27	5.27	5.30	5.31	5.30	5.30	4.94
		Amps	11.2	12.0	12.6	12.7	14.5	14.5	14.5	14.6	16.6	16.6	16.6	16.7	18.9	18.9	18.9	19.0	21.5	21.5	21.4	21.6	21.6	21.6	21.6	20.1
		Hi PR	270	274	279	284	318	319	321	326	363	364	366	370	410	412	414	418	462	463	465	470	507	508	510	509
		Lo PR	121	122	128	133	130	132	135	140	136	138	141	146	142	143	146	151	147	148	151	156	151	152	155	162

IDB = Entering Indoor Dry Bulb Temperature

Shaded area is AHRI conditions

kW = Total system power

High and low pressures are measured at the liquid and suction service valves.

Amps = outdoor unit amps (comp.+fan)

Airflow may vary depending on actual ambient conditions and system operation modes.

Expanded Cooling Data — DX6VSS4810A* / DV48FECD14A*

			Outdoor Ambient Temperature																							
			65°F				75°F				85°F				95°F				105°F				115°F			
			Entering Indoor Wet Bulb Temperature																							
IDB	Airflow		59	63	67	71	59	63	67	71	59	63	67	71	59	63	67	71	59	63	67	71	59	63	67	71
70	1170	MBh	34.6	39.5	46.0		45.3	45.9	47.3		44.1	44.7	46.1		42.0	42.6	44.0		39.5	40.1	41.5		31.7	32.3	33.4	
		S/T	0.58	0.50	0.36		0.57	0.50	0.37		0.60	0.52	0.39		0.62	0.54	0.41		0.64	0.56	0.43		0.69	0.62	0.49	
		ΔT	21	19	16		20	18	14		20	18	15		20	18	14		19	18	14		22	20	17	
		kW	2.44	2.89	3.53		4.36	4.36	4.35		4.96	4.95	4.95		5.60	5.60	5.59		6.33	6.32	6.31		5.34	5.34	5.33	
		Amps	9.3	11.2	13.8		17.3	17.3	17.2		19.9	19.9	19.8		22.7	22.7	22.6		25.8	25.8	25.8		21.8	21.8	21.8	
		Hi PR	259	267	277		323	324	326		369	370	372		419	420	422		472	474	476		504	505	507	
		Lo PR	116	115	114		120	122	124		126	128	130		131	133	136		136	138	141		143	144	147	
	1380	MBh	41.2	45.3	48.4		46.0	46.6	48.0		44.8	45.4	46.8		42.7	43.4	44.7		40.2	40.9	42.2		32.3	32.9	34.0	
		S/T	0.63	0.56	0.44		0.65	0.57	0.44		0.67	0.60	0.47		0.69	0.62	0.49		0.71	0.64	0.51		1.00	0.69	0.56	
		ΔT	20	18	13		18	16	13		19	17	13		18	16	13		18	16	13		21	19	15	
		kW	3.12	3.57	3.85		4.40	4.39	4.38		4.99	4.99	4.98		5.64	5.63	5.63		6.36	6.36	6.35		5.37	5.36	5.36	
		Amps	12.1	14.0	15.1		17.4	17.4	17.4		20.0	20.0	20.0		22.8	22.8	22.8		26.0	26.0	25.9		21.9	21.9	21.9	
		Hi PR	271	278	285		326	327	329		372	373	375		422	423	425		475	477	479		507	508	510	
		Lo PR	114	113	120		122	124	126		128	130	133		133	135	138		138	140	143		145	146	149	
	1590	MBh	43.6	46.2	49.3		46.9	47.5	48.9		45.7	46.3	47.7		43.6	44.3	45.6		41.1	41.8	43.1		33.1	33.6	34.8	
		S/T	0.67	0.60	0.47		0.68	0.61	0.48		0.71	0.63	0.50		0.73	0.65	0.52		0.75	0.67	0.54		1.00	0.72	0.59	
		ΔT	19	17	12		17	15	12		17	16	12		17	15	12		17	15	12		20	18	14	
		kW	3.35	3.60	3.88		4.42	4.42	4.41		5.02	5.02	5.01		5.67	5.66	5.65		6.39	6.38	6.38		5.39	5.38	5.38	
		Amps	13.1	14.1	15.2		17.6	17.5	17.5		20.2	20.1	20.1		23.0	22.9	22.9		26.1	26.1	26.0		22.0	22.0	22.0	
		Hi PR	276	280	288		329	330	332		375	376	378		425	426	428		478	479	481		509	510	512	
		Lo PR	115	116	122		124	126	129		131	132	135		136	137	140		141	142	145		147	148	151	
75	1170	MBh	34.6	39.5	46.0	49.8	45.3	45.9	47.3	49.4	44.1	44.7	46.1	48.2	42.0	42.7	44.0	46.1	39.5	40.2	41.5	40.2	31.8	32.3	33.5	33.7
		S/T	0.71	0.62	0.48	0.35	0.70	0.62	0.49	0.36	0.72	0.65	0.52	0.38	0.74	0.67	0.54	0.40	1.00	0.69	0.56	0.41	1.00	0.74	0.61	0.47
		ΔT	25	24	21	15	24	22	18	15	24	22	19	15	24	22	18	15	23	22	18	16	27	25	21	17
		kW	2.44	2.89	3.53	3.85	4.36	4.35	4.34	4.39	4.96	4.95	4.94	4.98	5.60	5.60	5.59	5.63	6.32	6.32	6.31	5.44	5.34	5.34	5.33	4.97
		Amps	9.3	11.2	13.8	15.1	17.3	17.3	17.2	17.4	19.9	19.9	19.8	20.0	22.7	22.7	22.6	22.8	25.8	25.8	25.8	22.2	21.8	21.8	21.8	20.3
		Hi PR	259	267	277	287	323	324	326	331	369	371	373	377	419	420	422	427	473	474	476	466	504	505	507	507
		Lo PR	116	115	114	122	120	122	124	129	126	128	131	135	131	133	136	140	136	138	141	143	143	144	147	153
	1380	MBh	41.2	45.4	48.4	50.5	46.0	46.6	48.0	50.1	44.8	45.5	46.8	48.9	42.7	**43.4**	44.8	46.9	40.2	40.9	42.2	40.9	32.3	32.9	34.1	34.2
		S/T	0.75	0.68	0.56	0.42	0.77	0.70	0.57	0.43	0.79	0.72	0.59	0.45	1.00	**0.74**	0.61	0.47	1.00	0.76	0.63	0.49	1.00	0.81	0.68	0.54
		ΔT	24	23	17	14	22	20	17	14	22	21	17	14	22	**20**	17	14	22	20	17	15	25	23	20	16
		kW	3.11	3.57	3.84	3.89	4.39	4.39	4.38	4.42	4.99	4.99	4.98	5.02	5.64	**5.63**	5.62	5.66	6.36	6.35	6.34	5.47	5.36	5.36	5.35	5.00
		Amps	12.1	14.0	15.0	15.2	17.4	17.4	17.4	17.5	20.0	20.0	20.0	20.1	22.8	**22.8**	22.8	22.9	26.0	25.9	25.9	22.3	21.9	21.9	21.9	20.4
		Hi PR	271	278	285	290	326	327	329	334	372	373	375	380	422	**423**	425	430	476	477	479	469	507	508	510	509
		Lo PR	114	113	120	124	122	124	126	131	128	130	133	137	133	**135**	138	142	138	140	143	145	145	146	149	155
	1590	MBh	43.6	46.2	49.3	51.4	46.9	47.5	48.9	51.0	45.7	46.3	47.7	49.8	43.6	44.3	45.7	47.7	41.1	41.8	43.1	41.7	33.1	33.6	34.8	35.0
		S/T	0.79	0.72	0.60	0.46	0.81	0.73	0.60	0.47	0.83	0.76	0.63	0.49	1.00	0.78	0.65	0.51	1.00	0.80	0.67	0.52	1.00	0.85	0.72	0.58
		ΔT	23	22	16	13	21	19	16	13	21	20	16	13	21	19	16	12	21	19	16	14	24	22	18	14
		kW	3.34	3.60	3.87	3.91	4.42	4.42	4.41	4.45	5.02	5.01	5.00	5.05	5.66	5.66	5.65	5.69	6.38	6.38	6.37	5.49	5.38	5.38	5.37	5.02
		Amps	13.1	14.1	15.2	15.3	17.5	17.5	17.5	17.7	20.1	20.1	20.1	20.3	22.9	22.9	22.9	23.1	26.1	26.1	26.0	22.4	22.0	22.0	22.0	20.5
		Hi PR	276	281	288	293	329	330	332	337	375	376	378	383	425	426	428	433	478	480	482	472	509	511	512	512
		Lo PR	115	116	122	127	124	126	129	134	131	132	135	140	136	137	140	145	141	142	145	147	147	148	151	158

IDB = Entering Indoor Dry Bulb Temperature

Shaded area is ACCA (TVA) conditions

kW = Total system power

High and low pressures are measured at the liquid and suction service valves.

Amps = outdoor unit amps (comp.+fan)

Airflow may vary depending on actual ambient conditions and system operation modes.

			Outdoor Ambient Temperature																							
			65°F				75°F				85°F				95°F				105°F				115°F			
			Entering Indoor Wet Bulb Temperature																							
IDB	Airflow		59	63	67	71	59	63	67	71	59	63	67	71	59	63	67	71	59	63	67	71	59	63	67	71
80	1170	MBh	34.8	39.7	46.2	50.0	45.5	46.2	47.5	49.6	44.3	45.0	46.3	48.4	42.3	42.9	44.3	46.4	39.8	40.4	41.8	40.5	32.0	32.5	33.7	33.8
		S/T	0.84	0.74	0.60	0.47	0.82	0.74	0.61	0.48	1.00	0.77	0.64	0.50	1.00	0.79	0.66	0.52	1.00	0.81	0.68	0.53	1.00	0.86	0.73	0.59
		ΔT	29	28	25	19	28	26	22	19	28	26	23	19	28	26	22	19	27	26	22	21	31	29	25	21
		kW	2.44	2.89	3.53	3.85	4.36	4.36	4.35	4.39	4.96	4.95	4.94	4.99	5.60	5.60	5.59	5.63	6.33	6.32	6.31	5.44	5.34	5.34	5.33	4.98
		Amps	9.3	11.2	13.8	15.1	17.3	17.3	17.2	17.4	19.9	19.9	19.8	20.0	22.7	22.7	22.6	22.8	25.8	25.8	25.8	22.2	21.8	21.8	21.8	20.3
		Hi PR	260	267	277	288	324	325	327	332	370	371	373	378	420	421	423	428	473	474	476	467	505	506	508	507
		Lo PR	117	115	115	123	121	122	125	130	127	128	131	136	132	133	136	141	137	138	141	143	143	145	147	154
	1380	MBh	41.4	45.6	48.7	50.8	46.2	46.9	48.3	50.3	45.0	45.7	47.1	49.1	43.0	43.6	**45.0**	47.1	40.5	41.1	42.5	41.1	32.5	33.1	34.3	34.4
		S/T	0.87	0.80	0.68	0.54	1.00	0.82	0.69	0.55	1.00	0.84	0.71	0.57	1.00	0.86	**0.73**	0.59	1.00	0.88	0.75	0.61	1.00	1.00	0.80	0.66
		ΔT	29	27	21	18	26	24	21	18	26	25	21	18	26	24	**21**	18	26	24	21	19	30	28	24	20
		kW	3.12	3.57	3.85	3.89	4.40	4.39	4.38	4.42	4.99	4.99	4.98	5.02	5.64	5.63	**5.62**	5.67	6.36	6.36	6.35	5.47	5.37	5.36	5.36	5.00
		Amps	12.1	14.0	15.1	15.2	17.4	17.4	17.4	17.6	20.0	20.0	20.0	20.2	22.8	22.8	**22.8**	23.0	26.0	26.0	25.9	22.3	21.9	21.9	21.9	20.4
		Hi PR	271	278	286	291	327	328	330	335	373	374	376	381	423	424	**426**	431	476	477	479	470	507	509	510	510
		Lo PR	115	114	120	125	123	124	127	132	129	130	133	138	134	135	**138**	143	139	140	143	145	145	146	149	156
	1590	MBh	43.9	46.5	49.6	51.6	47.1	47.8	49.1	51.2	45.9	46.6	48.0	50.0	43.9	44.5	45.9	48.0	41.4	42.0	43.4	41.9	33.3	33.8	35.0	35.2
		S/T	0.91	0.84	0.72	0.58	1.00	0.85	0.72	0.59	1.00	0.88	0.75	0.61	1.00	0.90	0.77	0.63	1.00	0.92	0.79	0.64	1.00	1.00	0.84	0.70
		ΔT	28	26	20	17	25	23	20	16	25	24	20	17	25	23	20	16	25	23	20	18	28	26	23	19
		kW	3.35	3.60	3.88	3.92	4.42	4.42	4.41	4.45	5.02	5.02	5.01	5.05	5.67	5.66	5.65	5.69	6.39	6.38	6.37	5.49	5.39	5.38	5.38	5.02
		Amps	13.1	14.1	15.2	15.4	17.6	17.5	17.5	17.7	20.2	20.1	20.1	20.3	23.0	22.9	22.9	23.1	26.1	26.1	26.0	22.4	22.0	22.0	22.0	20.5
		Hi PR	277	281	289	293	329	331	333	337	376	377	379	384	425	427	429	433	479	480	482	472	510	511	513	513
		Lo PR	116	116	122	127	125	126	129	134	131	132	135	140	136	138	140	145	141	143	145	148	147	149	152	158
85	1170	MBh	35.4	40.4	47.0	50.8	46.3	46.9	48.3	50.4	45.1	45.7	47.1	49.2	43.0	43.7	45.1	47.1	40.5	41.2	42.5	41.2	32.6	33.2	34.3	34.5
		S/T	1.00	0.84	0.70	0.57	1.00	0.84	0.71	0.57	1.00	0.87	0.73	0.60	1.00	0.88	0.75	0.62	1.00	1.00	0.77	0.63	1.00	1.00	0.83	0.69
		ΔT	33	32	29	23	31	29	26	22	31	30	26	23	31	29	26	22	31	29	26	25	35	33	29	25
		kW	2.45	2.90	3.54	3.86	4.37	4.37	4.36	4.40	4.97	4.96	4.95	5.00	5.61	5.61	5.60	5.64	6.34	6.33	6.32	5.45	5.35	5.35	5.34	4.98
		Amps	9.4	11.2	13.9	15.1	17.3	17.3	17.3	17.5	19.9	19.9	19.9	20.0	22.7	22.7	22.7	22.9	25.9	25.9	25.8	22.2	21.9	21.9	21.8	20.3
		Hi PR	261	268	279	289	325	326	328	333	371	372	374	379	421	422	424	429	475	476	478	468	506	507	509	508
		Lo PR	118	117	116	125	122	124	127	132	128	130	133	138	134	135	138	143	139	140	143	145	145	146	149	156
	1380	MBh	42.1	46.3	49.4	51.5	47.0	47.7	49.0	51.1	45.8	46.5	47.8	49.9	43.8	44.4	45.8	47.9	41.2	41.9	43.3	41.8	33.2	33.8	34.9	35.0
		S/T	1.00	0.90	0.78	0.64	1.00	0.92	0.78	0.65	1.00	0.94	0.81	0.67	1.00	1.00	0.83	0.69	1.00	1.00	0.85	0.70	1.00	1.00	0.90	0.76
		ΔT	33	31	25	21	30	28	25	21	30	28	25	21	30	28	25	21	29	28	24	23	33	31	28	24
		kW	3.12	3.58	3.86	3.90	4.41	4.40	4.39	4.43	5.00	5.00	4.99	5.03	5.65	5.64	5.64	5.68	6.37	6.37	6.36	5.48	5.37	5.37	5.36	5.01
		Amps	12.2	14.0	15.1	15.3	17.5	17.5	17.4	17.6	20.1	20.1	20.0	20.2	22.9	22.9	22.8	23.0	26.0	26.0	26.0	22.3	22.0	22.0	21.9	20.4
		Hi PR	273	280	287	292	328	329	331	336	374	375	377	382	424	425	427	432	477	479	481	471	509	510	512	511
		Lo PR	116	116	122	127	124	126	129	134	130	132	135	140	136	137	140	145	141	142	145	147	147	148	151	157
	1590	MBh	44.6	47.2	50.3	52.4	47.9	48.6	49.9	52.0	46.7	47.4	48.7	50.8	44.7	45.3	46.7	48.8	42.1	42.8	44.2	42.6	33.9	34.5	35.7	35.8
		S/T	1.00	0.93	0.82	0.68	1.00	0.95	0.82	0.68	1.00	0.98	0.85	0.71	1.00	1.00	0.86	0.73	1.00	1.00	0.89	0.74	1.00	1.00	0.93	0.80
		ΔT	32	30	24	20	29	27	23	20	29	27	24	20	29	27	23	20	28	27	23	22	32	30	27	23
		kW	3.35	3.61	3.89	3.93	4.43	4.43	4.42	4.46	5.03	5.03	5.02	5.06	5.68	5.67	5.66	5.70	6.40	6.39	6.38	5.50	5.39	5.39	5.38	5.02
		Amps	13.1	14.1	15.2	15.4	17.6	17.6	17.5	17.7	20.2	20.2	20.1	20.3	23.0	23.0	22.9	23.1	26.1	26.1	26.1	22.4	22.1	22.0	22.0	20.5
		Hi PR	278	282	290	295	331	332	334	339	377	378	380	385	427	428	430	435	480	481	483	473	511	512	514	514
		Lo PR	118	118	124	129	127	128	131	136	133	134	137	142	138	139	142	147	143	144	147	149	149	150	153	160

IDB = Entering Indoor Dry Bulb Temperature

Shaded area is AHRI conditions

kW = Total system power

High and low pressures are measured at the liquid and suction service valves.

Amps = outdoor unit amps (comp.+fan)

Airflow may vary depending on actual ambient conditions and system operation modes.

Expanded Cooling Data — DX6VSS6010A* / DV60FECD14A*

			Outdoor Ambient Temperature																							
			65°F				75°F				85°F				95°F				105°F				115°F			
			Entering Indoor Wet Bulb Temperature																							
IDB	Airflow		59	63	67	71	59	63	67	71	59	63	67	71	59	63	67	71	59	63	67	71	59	63	67	71
70	1390	MBh	41.6	49.2	54.0		53.3	54.1	55.7		51.9	52.7	54.3		49.5	50.2	51.8		41.9	42.6	44.1		35.9	36.5	37.8	
		S/T	0.57	0.49	0.36		0.56	0.49	0.36		0.58	0.51	0.38		0.60	0.53	0.40		0.64	0.56	0.43		0.69	0.61	0.48	
		ΔT	20	19	16		19	17	14		19	17	14		19	17	14		21	19	15		22	20	16	
		kW	2.90	3.68	4.18		5.15	5.14	5.13		5.85	5.84	5.83		6.60	6.60	6.59		6.01	6.01	6.00		5.75	5.75	5.74	
		Amps	10.9	14.1	16.0		20.1	20.1	20.1		23.2	23.1	23.1		26.4	26.4	26.4		24.2	24.2	24.2		23.3	23.2	23.2	
		Hi PR	260	272	280		324	325	327		370	371	373		420	421	423		459	460	462		501	503	504	
		Lo PR	113	111	113		117	119	122		123	125	128		128	130	133		132	134	136		141	142	145	
	1640	MBh	47.6	51.4	57.0		54.1	54.9	56.5		52.7	53.5	55.1		50.3	51.1	52.7		42.7	43.4	44.8		36.5	37.2	38.5	
		S/T	0.64	0.56	0.42		0.63	0.56	0.43		0.65	0.58	0.45		0.67	0.60	0.47		0.71	0.64	0.51		0.76	0.69	0.56	
		ΔT	20	18	13		17	16	13		18	16	13		17	16	13		19	17	14		20	18	15	
		kW	3.50	3.93	4.55		5.19	5.18	5.17		5.89	5.88	5.87		6.64	6.64	6.63		6.05	6.04	6.03		5.78	5.77	5.77	
		Amps	13.4	15.1	17.5		20.3	20.3	20.2		23.3	23.3	23.3		26.6	26.6	26.5		24.4	24.3	24.3		23.4	23.4	23.3	
		Hi PR	271	277	286		327	328	330		373	374	376		423	424	426		462	463	465		504	505	507	
		Lo PR	112	113	117		119	121	124		125	127	130		130	132	135		134	136	138		143	144	147	
	1890	MBh	50.2	54.3	58.1		55.2	56.0	57.6		53.8	54.6	56.2		51.4	52.1	53.7		43.6	44.3	45.8		37.4	38.0	39.3	
		S/T	0.68	0.60	0.46		0.66	0.59	0.47		0.69	0.62	0.49		0.71	0.63	0.51		0.75	0.67	0.54		1.00	0.72	0.59	
		ΔT	19	17	12		16	15	11		17	15	12		16	15	11		18	16	13		19	17	14	
		kW	3.74	4.25	4.58		5.22	5.22	5.21		5.92	5.91	5.90		6.67	6.67	6.66		6.07	6.07	6.06		5.80	5.80	5.79	
		Amps	14.3	16.4	17.7		20.4	20.4	20.4		23.5	23.5	23.4		26.8	26.7	26.7		24.5	24.4	24.4		23.5	23.5	23.4	
		Hi PR	276	284	288		329	331	333		376	377	379		426	427	429		465	466	468		507	508	510	
		Lo PR	114	114	119		122	123	126		128	129	132		133	134	137		136	138	141		145	146	149	
75	1390	MBh	41.6	49.2	54.0	58.6	53.3	54.1	55.7	58.2	51.9	52.7	54.3	56.8	49.5	50.3	51.9	54.3	41.9	42.6	44.1	44.8	35.9	36.5	37.8	37.7
		S/T	0.70	0.62	0.48	0.34	0.68	0.61	0.48	0.35	0.70	0.63	0.50	0.37	0.72	0.65	0.52	0.39	0.76	0.69	0.56	0.42	1.00	0.74	0.61	0.48
		ΔT	25	23	20	14	22	21	18	14	23	21	18	15	22	21	18	14	25	23	20	16	26	24	20	16
		kW	2.90	3.68	4.17	4.55	5.14	5.14	5.13	5.18	5.84	5.84	5.83	5.87	6.60	6.59	6.58	6.63	6.01	6.01	6.00	5.67	5.75	5.75	5.74	5.30
		Amps	10.9	14.0	16.0	17.5	20.1	20.1	20.0	20.2	23.1	23.1	23.1	23.3	26.4	26.4	26.4	26.6	24.2	24.2	24.1	22.8	23.3	23.2	23.2	21.4
		Hi PR	261	272	280	288	324	325	327	332	370	371	373	378	420	421	423	428	459	461	462	463	502	503	505	503
		Lo PR	113	111	113	120	117	119	122	126	123	125	128	132	128	130	133	137	132	134	136	142	141	142	145	151
	1640	MBh	47.6	51.4	57.0	59.5	54.2	54.9	56.6	59.0	52.8	53.5	55.1	57.6	50.3	**51.1**	52.7	55.2	42.7	43.4	44.9	45.5	36.6	37.2	38.5	38.3
		S/T	0.76	0.68	0.55	0.41	0.75	0.68	0.55	0.42	0.77	0.70	0.57	0.44	0.79	**0.72**	0.59	0.46	1.00	0.76	0.63	0.49	1.00	0.81	0.68	0.55
		ΔT	24	22	16	13	21	19	16	13	21	20	17	13	21	**19**	16	13	24	22	18	14	24	23	19	15
		kW	3.49	3.93	4.54	4.59	5.18	5.18	5.17	5.22	5.88	5.88	5.87	5.91	6.64	**6.63**	6.62	6.67	6.04	6.04	6.03	5.70	5.77	5.77	5.76	5.32
		Amps	13.3	15.0	17.5	17.7	20.3	20.3	20.2	20.4	23.3	23.3	23.2	23.5	26.6	**26.6**	26.5	26.7	24.3	24.3	24.3	22.9	23.4	23.4	23.3	21.5
		Hi PR	271	278	286	291	327	328	330	335	373	374	376	381	423	**424**	426	431	462	463	465	465	504	505	507	505
		Lo PR	112	113	117	122	119	121	124	128	125	127	130	134	130	**132**	135	139	134	136	138	144	143	144	147	153
	1890	MBh	50.2	54.3	58.1	60.6	55.2	56.0	57.6	60.1	53.8	54.6	56.2	58.7	51.4	52.2	53.8	56.2	43.6	44.3	45.8	46.4	37.4	38.1	39.4	39.1
		S/T	0.80	0.72	0.58	0.45	0.79	0.71	0.59	0.45	0.81	0.74	0.61	0.48	0.83	0.76	0.63	0.50	1.00	0.80	0.67	0.53	1.00	0.85	0.72	0.59
		ΔT	23	21	15	12	20	18	15	12	20	19	15	12	20	18	15	12	22	21	17	13	23	21	18	14
		kW	3.74	4.25	4.58	4.62	5.22	5.21	5.20	5.25	5.92	5.91	5.90	5.95	6.67	6.66	6.65	6.70	6.07	6.07	6.06	5.72	5.80	5.79	5.79	5.34
		Amps	14.3	16.4	17.6	17.8	20.4	20.4	20.4	20.6	23.5	23.4	23.4	23.6	26.7	26.7	26.7	26.9	24.4	24.4	24.4	23.0	23.5	23.4	23.4	21.6
		Hi PR	277	284	289	294	330	331	333	338	376	377	379	384	426	427	429	434	465	466	468	468	507	508	510	508
		Lo PR	114	114	119	124	122	123	126	131	128	129	132	137	133	134	137	142	136	138	141	146	145	146	149	156

IDB = Entering Indoor Dry Bulb Temperature

Shaded area is ACCA (TVA) conditions

kW = Total system power

High and low pressures are measured at the liquid and suction service valves.

Amps = outdoor unit amps (comp.+fan)

Airflow may vary depending on actual ambient conditions and system operation modes.

Expanded Cooling Data — DX6VSS6010A* / DV60FECD14A* (cont.)

			Outdoor Ambient Temperature																							
			65°F				75°F				85°F				95°F				105°F				115°F			
			Entering Indoor Wet Bulb Temperature																							
IDB	Airflow		59	63	67	71	59	63	67	71	59	63	67	71	59	63	67	71	59	63	67	71	59	63	67	71
80	1390	MBh	41.9	49.4	54.3	58.9	53.6	54.4	56.0	58.4	52.2	53.0	54.6	57.0	49.8	50.5	52.2	54.6	42.2	42.9	44.3	45.0	36.1	36.7	38.0	37.9
		S/T	0.82	0.74	0.60	0.46	0.79	0.72	0.60	0.46	1.00	0.75	0.62	0.49	1.00	0.76	0.64	0.50	1.00	0.81	0.68	0.54	1.00	0.86	0.73	0.60
		ΔT	29	28	24	18	26	25	21	18	27	25	22	18	26	25	21	18	29	27	24	20	30	28	25	21
		kW	2.90	3.68	4.18	4.55	5.15	5.14	5.13	5.18	5.85	5.84	5.83	5.88	6.60	6.60	6.58	6.63	6.01	6.01	6.00	5.67	5.75	5.75	5.74	5.30
		Amps	10.9	14.1	16.0	17.5	20.1	20.1	20.1	20.3	23.2	23.1	23.1	23.3	26.4	26.4	26.4	26.6	24.2	24.2	24.2	22.8	23.3	23.2	23.2	21.4
		Hi PR	261	273	281	288	324	326	328	332	371	372	374	379	421	422	424	429	460	461	463	463	502	503	505	503
		Lo PR	113	112	113	120	118	119	122	127	124	125	128	133	129	130	133	138	133	134	137	142	141	143	146	152
	1640	MBh	47.8	51.7	57.3	59.8	54.5	55.2	56.8	59.3	53.0	53.8	55.4	57.9	50.6	51.4	**53.0**	55.5	43.0	43.7	45.1	45.7	36.8	37.4	38.7	38.5
		S/T	0.89	0.80	0.66	0.53	0.87	0.80	0.67	0.53	1.00	0.82	0.69	0.56	1.00	0.84	**0.71**	0.58	1.00	0.88	0.75	0.61	1.00	0.93	0.80	0.67
		ΔT	28	26	20	17	25	23	20	17	25	24	20	17	25	23	**20**	17	28	26	22	19	29	27	23	19
		kW	3.50	3.93	4.55	4.60	5.19	5.18	5.17	5.22	5.89	5.88	5.87	5.92	6.64	6.64	**6.62**	6.67	6.05	6.04	6.03	5.70	5.78	5.77	5.77	5.32
		Amps	13.3	15.1	17.5	17.7	20.3	20.3	20.2	20.4	23.3	23.3	23.3	23.5	26.6	26.6	**26.5**	26.8	24.4	24.3	24.3	22.9	23.4	23.4	23.3	21.5
		Hi PR	272	278	286	291	327	329	331	335	374	375	377	382	423	425	**427**	432	463	464	466	466	505	506	508	506
		Lo PR	113	113	117	122	120	121	124	129	126	127	130	135	131	132	**135**	140	135	136	139	144	143	145	147	154
	1890	MBh	50.5	54.6	58.4	60.8	55.5	56.3	57.9	60.4	54.1	54.9	56.5	58.9	51.7	52.4	54.1	56.5	43.9	44.6	46.0	46.6	37.7	38.3	39.6	39.4
		S/T	0.92	0.84	0.70	0.56	0.90	0.83	0.70	0.57	1.00	0.85	0.73	0.59	1.00	0.87	0.75	0.61	1.00	0.92	0.79	0.65	1.00	1.00	0.84	0.71
		ΔT	27	25	19	16	24	22	19	16	24	22	19	16	24	22	19	16	27	25	21	17	27	26	22	18
		kW	3.74	4.25	4.58	4.63	5.22	5.22	5.21	5.25	5.92	5.91	5.90	5.95	6.67	6.67	6.66	6.71	6.07	6.07	6.06	5.72	5.80	5.80	5.79	5.34
		Amps	14.3	16.4	17.7	17.9	20.4	20.4	20.4	20.6	23.5	23.5	23.4	23.6	26.8	26.7	26.7	26.9	24.5	24.4	24.4	23.0	23.5	23.5	23.4	21.6
		Hi PR	277	284	289	294	330	331	333	338	376	378	380	385	426	428	429	434	465	467	468	468	507	509	510	508
		Lo PR	115	115	120	124	122	124	126	131	128	129	132	137	133	134	137	142	137	138	141	146	145	147	150	156
85	1390	MBh	42.6	50.3	55.2	59.8	54.5	55.3	56.9	59.4	53.1	53.9	55.5	57.9	50.7	51.4	53.1	55.5	43.0	43.7	45.2	45.8	36.8	37.5	38.8	38.6
		S/T	1.00	0.83	0.70	0.55	1.00	0.82	0.69	0.56	1.00	0.84	0.71	0.58	1.00	0.86	0.73	0.60	1.00	1.00	0.77	0.64	1.00	1.00	0.83	0.70
		ΔT	32	32	28	21	30	28	25	21	30	28	25	22	30	28	25	21	33	31	28	24	34	32	28	24
		kW	2.91	3.69	4.19	4.57	5.16	5.15	5.14	5.19	5.86	5.85	5.84	5.89	6.61	6.61	6.60	6.64	6.02	6.02	6.01	5.68	5.76	5.76	5.75	5.30
		Amps	11.0	14.1	16.1	17.6	20.2	20.2	20.1	20.3	23.2	23.2	23.1	23.3	26.5	26.5	26.4	26.6	24.3	24.2	24.2	22.8	23.3	23.3	23.3	21.4
		Hi PR	262	274	282	290	326	327	329	334	372	373	375	380	422	423	425	430	461	462	464	464	503	504	506	504
		Lo PR	115	113	115	122	120	121	124	129	126	127	130	134	131	132	135	139	134	136	139	144	143	144	147	154
	1640	MBh	48.6	52.5	58.2	60.7	55.4	56.1	57.7	60.2	54.0	54.7	56.3	58.8	51.5	52.3	53.9	56.4	43.8	44.5	45.9	46.5	37.5	38.2	39.5	39.2
		S/T	1.00	0.90	0.76	0.62	1.00	0.89	0.76	0.63	1.00	0.91	0.79	0.65	1.00	0.93	0.80	0.67	1.00	1.00	0.85	0.71	1.00	1.00	0.90	0.77
		ΔT	32	30	23	20	28	27	23	20	29	27	24	20	28	27	23	20	32	30	26	22	32	30	27	23
		kW	3.51	3.94	4.56	4.61	5.20	5.20	5.18	5.23	5.90	5.89	5.88	5.93	6.65	6.65	6.64	6.68	6.06	6.05	6.04	5.71	5.79	5.78	5.77	5.33
		Amps	13.4	15.1	17.6	17.8	20.3	20.3	20.3	20.5	23.4	23.4	23.3	23.5	26.7	26.6	26.6	26.8	24.4	24.4	24.3	23.0	23.4	23.4	23.4	21.5
		Hi PR	273	279	288	293	329	330	332	337	375	376	378	383	425	426	428	433	464	465	467	467	506	507	509	507
		Lo PR	114	115	119	124	122	123	126	131	127	129	132	136	133	134	137	141	136	138	141	146	145	146	149	156
	1890	MBh	51.3	55.4	59.3	61.7	56.4	57.2	58.8	61.3	55.0	55.8	57.4	59.9	52.6	53.4	55.0	57.4	44.7	45.4	46.9	47.4	38.4	39.0	40.3	40.1
		S/T	1.00	0.93	0.79	0.66	1.00	0.93	0.80	0.67	1.00	0.95	0.82	0.69	1.00	1.00	0.84	0.71	1.00	1.00	0.89	0.75	1.00	1.00	0.94	0.81
		ΔT	31	29	22	19	27	26	22	19	28	26	23	19	27	26	22	19	31	29	25	21	31	29	26	22
		kW	3.75	4.26	4.59	4.64	5.23	5.23	5.22	5.26	5.93	5.93	5.91	5.96	6.69	6.68	6.67	6.72	6.08	6.08	6.07	5.73	5.81	5.80	5.80	5.35
		Amps	14.4	16.4	17.7	17.9	20.5	20.5	20.4	20.6	23.5	23.5	23.5	23.7	26.8	26.8	26.7	26.9	24.5	24.5	24.4	23.1	23.5	23.5	23.5	21.6
		Hi PR	278	286	290	295	331	333	335	340	378	379	381	386	428	429	431	436	467	468	470	470	509	510	512	510
		Lo PR	116	116	121	126	124	125	128	133	130	131	134	139	135	136	139	144	139	140	143	148	147	149	151	158

IDB = Entering Indoor Dry Bulb Temperature

Shaded area is AHRI conditions

kW = Total system power

High and low pressures are measured at the liquid and suction service valves.

Amps = outdoor unit amps (comp.+fan)

Airflow may vary depending on actual ambient conditions and system operation modes.

Expanded Cooling Data — DX6VSA181WA* / DV24FECB14A*

			Outdoor Ambient Temperature																							
			65°F				75°F				85°F				95°F				105°F				115°F			
			Entering Indoor Wet Bulb Temperature																							
IDB	Airflow		59	63	67	71	59	63	67	71	59	63	67	71	59	63	67	71	59	63	67	71	59	63	67	71
70	520	MBh	15.9	16.6	17.6		16.7	16.9	17.4		16.3	16.5	17.0		15.5	15.7	16.2		14.6	14.8	15.3		13.7	14.0	14.5	
		S/T	0.62	0.54	0.40		0.62	0.54	0.40		0.65	0.57	0.43		1.00	0.59	0.45		1.00	0.61	0.47		1.00	0.67	0.52	
		ΔT	21	19	13		18	16	13		18	16	13		18	16	13		18	16	13		19	17	14	
		kW	1.04	1.07	1.07		1.20	1.20	1.20		1.36	1.35	1.35		1.52	1.52	1.51		1.70	1.70	1.70		1.91	1.91	1.91	
		Amps	3.6	3.8	3.9		4.5	4.5	4.4		5.1	5.1	5.1		5.8	5.8	5.8		6.6	6.6	6.6		7.5	7.5	7.5	
		Hi PR	243	245	245		280	281	283		320	321	323		363	364	366		410	411	412		459	460	462	
		Lo PR	125	126	131		133	135	138		140	142	145		146	147	151		151	153	156		158	160	163	
	610	MBh	16.6	17.3	17.9		17.0	17.2	17.7		16.5	16.8	17.3		15.8	16.0	16.5		14.8	15.1	15.6		14.0	14.2	14.7	
		S/T	0.69	0.61	0.47		0.70	0.62	0.48		0.73	0.65	0.51		1.00	0.67	0.53		1.00	0.69	0.55		1.00	0.74	0.60	
		ΔT	19	15	12		17	15	12		17	15	12		17	15	12		16	15	12		17	16	13	
		kW	1.08	1.08	1.07		1.21	1.21	1.21		1.36	1.36	1.36		1.53	1.53	1.52		1.71	1.71	1.70		1.92	1.92	1.92	
		Amps	3.8	3.9	3.9		4.5	4.5	4.5		5.2	5.1	5.1		5.9	5.9	5.8		6.6	6.6	6.6		7.6	7.6	7.6	
		Hi PR	246	245	247		282	283	285		322	324	325		366	367	368		412	413	415		462	463	464	
		Lo PR	127	130	133		136	137	140		142	144	147		148	150	153		154	155	158		161	162	165	
	700	MBh	17.4	17.7	18.2		17.3	17.5	18.0		16.8	17.1	17.6		16.1	16.3	16.8		15.2	15.4	15.9		14.3	14.5	15.0	
		S/T	0.73	0.65	0.51		0.74	0.66	0.52		1.00	0.69	0.54		1.00	0.71	0.56		1.00	0.73	0.59		1.00	1.00	0.64	
		ΔT	16	14	11		16	14	11		16	14	11		16	14	11		15	14	11		16	15	12	
		kW	1.09	1.08	1.08		1.22	1.22	1.22		1.37	1.37	1.37		1.53	1.53	1.53		1.72	1.71	1.71		1.93	1.93	1.93	
		Amps	3.9	3.9	3.9		4.5	4.5	4.5		5.2	5.2	5.2		5.9	5.9	5.9		6.7	6.7	6.7		7.6	7.6	7.6	
		Hi PR	247	248	249		285	286	288		325	326	328		368	369	371		414	415	417		464	465	467	
		Lo PR	130	132	135		138	140	143		145	146	150		151	152	155		156	158	161		163	165	168	
75	520	MBh	15.9	16.6	17.6	18.4	16.7	16.9	17.5	18.2	16.3	16.5	17.0	17.8	15.5	15.8	16.3	17.0	14.6	14.8	15.3	16.1	13.7	14.0	14.5	15.3
		S/T	0.75	0.67	0.53	0.38	1.00	0.68	0.54	0.39	1.00	0.70	0.56	0.41	1.00	0.72	0.58	0.43	1.00	0.75	0.61	0.46	1.00	1.00	0.66	0.51
		ΔT	25	23	17	14	21	20	17	14	22	20	17	14	21	20	17	14	21	20	17	13	22	21	18	14
		kW	1.04	1.07	1.07	1.08	1.20	1.20	1.20	1.21	1.35	1.35	1.35	1.36	1.52	1.52	1.51	1.52	1.70	1.70	1.70	1.71	1.91	1.91	1.91	1.92
		Amps	3.6	3.8	3.9	3.9	4.5	4.5	4.4	4.5	5.1	5.1	5.1	5.1	5.8	5.8	5.8	5.8	6.6	6.6	6.6	6.6	7.5	7.5	7.5	7.6
		Hi PR	243	245	245	249	280	281	283	287	320	321	323	327	363	364	366	370	410	411	413	417	459	460	462	466
		Lo PR	125	126	131	136	134	135	138	144	140	142	145	150	146	147	151	156	151	153	156	162	158	160	163	169
	610	MBh	16.6	17.4	17.9	18.6	17.0	17.2	17.7	18.5	16.5	16.8	17.3	18.0	15.8	**16.0**	16.5	17.3	14.8	15.1	15.6	16.4	14.0	14.2	14.7	15.5
		S/T	0.83	0.75	0.61	0.46	1.00	0.75	0.61	0.46	1.00	0.78	0.64	0.49	1.00	**0.80**	0.66	0.51	1.00	1.00	0.68	0.53	1.00	1.00	0.74	0.59
		ΔT	23	19	16	12	20	19	16	12	20	19	16	13	20	**19**	16	12	20	18	15	12	21	19	16	13
		kW	1.08	1.08	1.07	1.08	1.21	1.21	1.21	1.22	1.36	1.36	1.36	1.37	1.53	**1.52**	1.52	1.53	1.71	1.71	1.70	1.71	1.92	1.92	1.92	1.93
		Amps	3.8	3.9	3.9	3.9	4.5	4.5	4.5	4.5	5.1	5.1	5.1	5.2	5.9	**5.8**	5.8	5.9	6.6	6.6	6.6	6.7	7.6	7.6	7.6	7.6
		Hi PR	246	245	247	251	283	284	285	290	323	324	325	330	366	**367**	369	373	412	413	415	419	462	463	465	469
		Lo PR	127	130	133	138	136	137	140	146	142	144	147	153	148	**150**	153	158	154	155	158	164	161	162	165	171
	700	MBh	17.4	17.7	18.2	19.0	17.3	17.5	18.0	18.8	16.8	17.1	17.6	18.4	16.1	16.3	16.8	17.6	15.2	15.4	15.9	16.7	14.3	14.6	15.1	15.8
		S/T	0.87	0.79	0.65	0.50	1.00	0.79	0.65	0.50	1.00	0.82	0.68	0.53	1.00	0.84	0.70	0.55	1.00	1.00	0.72	0.57	1.00	1.00	0.78	0.63
		ΔT	19	18	15	11	19	18	15	11	19	18	15	12	19	18	15	11	19	17	14	11	20	18	15	12
		kW	1.08	1.08	1.08	1.09	1.22	1.22	1.22	1.23	1.37	1.37	1.37	1.38	1.53	1.53	1.53	1.54	1.71	1.71	1.71	1.72	1.93	1.93	1.92	1.93
		Amps	3.9	3.9	3.9	4.0	4.5	4.5	4.5	4.6	5.2	5.2	5.2	5.2	5.9	5.9	5.9	5.9	6.7	6.7	6.7	6.7	7.6	7.6	7.6	7.6
		Hi PR	247	248	250	254	285	286	288	292	325	326	328	332	368	369	371	375	415	416	417	422	464	465	467	471
		Lo PR	130	132	135	141	138	140	143	148	145	146	150	155	151	152	155	161	156	158	161	166	163	165	168	173

IDB = Entering Indoor Dry Bulb Temperature
High and low pressures are measured at the liquid and suction service valves.
Airflow may vary depending on actual ambient conditions and system operation modes.

Shaded area is ACCA (TVA) conditions

kW = Total system power
Amps = outdoor unit amps (comp.+fan)

EXPANDED COOLING DATA — DX6VSA181WA* / DV24FECB14A* (CONT.)

			Outdoor Ambient Temperature																							
			65°F				75°F				85°F				95°F				105°F				115°F			
			Entering Indoor Wet Bulb Temperature																							
IDB	Airflow		59	63	67	71	59	63	67	71	59	63	67	71	59	63	67	71	59	63	67	71	59	63	67	71
80	520	MBh	16.0	16.7	17.7	18.5	16.8	17.0	17.5	18.3	16.4	16.6	17.1	17.9	15.6	15.8	16.3	17.1	14.7	14.9	15.4	16.2	13.8	14.1	14.6	15.3
		S/T	1.00	0.80	0.66	0.51	1.00	0.81	0.67	0.52	1.00	0.83	0.69	0.54	1.00	1.00	0.71	0.56	1.00	1.00	0.74	0.59	1.00	1.00	0.79	0.64
		ΔT	29	27	20	17	25	23	20	17	25	24	21	17	25	23	20	17	25	23	20	17	26	24	21	18
		kW	1.04	1.07	1.07	1.08	1.20	1.20	1.20	1.21	1.36	1.35	1.35	1.36	1.52	1.52	1.51	1.52	1.70	1.70	1.70	1.71	1.91	1.91	1.91	1.92
		Amps	3.6	3.8	3.9	3.9	4.5	4.5	4.4	4.5	5.1	5.1	5.1	5.1	5.8	5.8	5.8	5.9	6.6	6.6	6.6	6.6	7.5	7.5	7.5	7.6
		Hi PR	243	245	245	249	281	282	283	288	321	322	323	328	364	365	367	371	410	411	413	417	460	461	463	467
		Lo PR	125	127	131	137	134	136	139	144	141	142	146	151	146	148	151	157	152	154	157	162	159	161	164	169
	610	MBh	16.7	17.4	18.0	18.7	17.1	17.3	17.8	18.6	16.6	16.9	17.4	18.1	15.9	16.1	**16.6**	17.4	14.9	15.2	15.7	16.4	14.1	14.3	14.8	15.6
		S/T	1.00	0.88	0.74	0.59	1.00	0.89	0.74	0.60	1.00	0.91	0.77	0.62	1.00	1.00	**0.79**	0.64	1.00	1.00	0.81	0.66	1.00	1.00	0.87	0.72
		ΔT	28	22	19	16	24	22	19	16	24	22	19	16	24	22	**19**	16	24	22	19	16	25	23	20	17
		kW	1.08	1.08	1.07	1.09	1.21	1.21	1.21	1.22	1.36	1.36	1.36	1.37	1.53	1.53	**1.52**	1.53	1.71	1.71	1.70	1.72	1.92	1.92	1.92	1.93
		Amps	3.8	3.9	3.9	3.9	4.5	4.5	4.5	4.5	5.1	5.1	5.1	5.2	5.9	5.9	**5.8**	5.9	6.6	6.6	6.6	6.7	7.6	7.6	7.6	7.6
		Hi PR	247	246	248	252	283	284	286	290	323	324	326	330	366	367	**369**	373	413	414	415	420	462	463	465	469
		Lo PR	127	130	133	139	136	138	141	146	143	145	148	153	149	150	**153**	159	154	156	159	164	161	163	166	171
	700	MBh	17.5	17.8	18.3	19.0	17.4	17.6	18.1	18.9	16.9	17.2	17.7	18.4	16.2	16.4	16.9	17.7	15.2	15.5	16.0	16.8	14.4	14.6	15.1	15.9
		S/T	1.00	0.92	0.78	0.63	1.00	0.92	0.78	0.63	1.00	1.00	0.81	0.66	1.00	1.00	0.83	0.68	1.00	1.00	0.85	0.70	1.00	1.00	1.00	0.76
		ΔT	23	21	18	15	23	21	18	15	23	21	18	15	23	21	18	15	23	21	18	15	24	22	19	16
		kW	1.09	1.08	1.08	1.09	1.22	1.22	1.22	1.23	1.37	1.37	1.37	1.38	1.53	1.53	1.53	1.54	1.72	1.71	1.71	1.72	1.93	1.93	1.93	1.94
		Amps	3.9	3.9	3.9	4.0	4.5	4.5	4.5	4.6	5.2	5.2	5.2	5.2	5.9	5.9	5.9	5.9	6.7	6.7	6.7	6.7	7.6	7.6	7.6	7.6
		Hi PR	247	248	250	254	285	287	288	292	325	327	328	332	369	370	371	376	415	416	418	422	465	466	467	472
		Lo PR	131	133	136	141	139	140	143	149	145	147	150	156	151	153	156	161	157	158	161	167	164	165	168	174
85	520	MBh	16.3	16.9	18.0	18.7	17.1	17.3	17.8	18.6	16.6	16.9	17.4	18.2	15.9	16.1	16.6	17.4	15.0	15.2	15.7	16.5	14.1	14.3	14.9	15.6
		S/T	1.00	0.91	0.77	0.62	1.00	1.00	0.77	0.62	1.00	1.00	0.80	0.65	1.00	1.00	0.82	0.67	1.00	1.00	1.00	0.69	1.00	1.00	1.00	0.75
		ΔT	33	31	24	20	28	27	24	20	28	27	24	21	28	27	24	20	28	26	23	20	29	27	24	21
		kW	1.04	1.07	1.07	1.08	1.21	1.21	1.20	1.21	1.36	1.36	1.35	1.36	1.52	1.52	1.52	1.53	1.70	1.70	1.70	1.71	1.92	1.91	1.91	1.92
		Amps	3.6	3.8	3.9	3.9	4.5	4.5	4.5	4.5	5.1	5.1	5.1	5.2	5.8	5.8	5.8	5.9	6.6	6.6	6.6	6.7	7.6	7.5	7.5	7.6
		Hi PR	245	246	246	251	282	283	285	289	322	323	325	329	365	366	368	372	411	412	414	418	461	462	464	468
		Lo PR	127	128	133	138	136	138	141	146	143	144	147	153	148	150	153	158	154	155	159	164	161	162	166	171
	610	MBh	16.9	17.7	18.2	19.0	17.3	17.6	18.1	18.9	16.9	17.1	17.6	18.4	16.1	16.4	16.9	17.7	15.2	15.5	16.0	16.7	14.4	14.6	15.1	15.9
		S/T	1.00	0.98	0.84	0.69	1.00	1.00	0.85	0.70	1.00	1.00	0.88	0.73	1.00	1.00	0.90	0.75	1.00	1.00	1.00	0.77	1.00	1.00	1.00	0.82
		ΔT	31	25	22	19	27	25	22	19	27	26	23	19	27	25	22	19	27	25	22	19	28	26	23	20
		kW	1.08	1.08	1.08	1.09	1.22	1.21	1.21	1.22	1.37	1.36	1.36	1.37	1.53	1.53	1.53	1.54	1.71	1.71	1.71	1.72	1.92	1.92	1.92	1.93
		Amps	3.8	3.9	3.9	4.0	4.5	4.5	4.5	4.5	5.2	5.2	5.1	5.2	5.9	5.9	5.9	5.9	6.7	6.7	6.6	6.7	7.6	7.6	7.6	7.6
		Hi PR	248	247	249	253	284	285	287	291	324	325	327	331	367	368	370	374	414	415	417	421	463	464	466	470
		Lo PR	129	132	135	141	138	140	143	148	145	146	150	155	151	152	155	161	156	158	161	166	163	165	168	173
	700	MBh	17.8	18.1	18.6	19.3	17.7	17.9	18.4	19.2	17.2	17.5	18.0	18.7	16.5	16.7	17.2	18.0	15.5	15.8	16.3	17.0	14.7	14.9	15.4	16.2
		S/T	1.00	1.00	0.88	0.73	1.00	1.00	0.89	0.74	1.00	1.00	0.91	0.77	1.00	1.00	0.93	0.79	1.00	1.00	1.00	0.81	1.00	1.00	1.00	0.86
		ΔT	26	25	21	18	26	24	21	18	26	25	22	18	26	24	21	18	26	24	21	18	27	25	22	19
		kW	1.09	1.09	1.08	1.09	1.22	1.22	1.22	1.23	1.37	1.37	1.37	1.38	1.54	1.53	1.53	1.54	1.72	1.72	1.71	1.72	1.93	1.93	1.93	1.94
		Amps	4.0	3.9	3.9	4.0	4.5	4.5	4.5	4.6	5.2	5.2	5.2	5.2	5.9	5.9	5.9	5.9	6.7	6.7	6.7	6.7	7.6	7.6	7.6	7.6
		Hi PR	248	249	251	255	287	288	289	294	327	328	329	334	370	371	372	377	416	417	419	423	466	467	469	473
		Lo PR	133	134	138	143	141	142	145	151	147	149	152	157	153	155	158	163	159	160	163	169	166	167	170	176

IDB = Entering Indoor Dry Bulb Temperature

Shaded area is AHRI conditions

kW = Total system power

High and low pressures are measured at the liquid and suction service valves.

Amps = outdoor unit amps (comp.+fan)

Airflow may vary depending on actual ambient conditions and system operation modes.

Expanded Cooling Data — DX6VSA241WA* / DV24FECB14A*

			Outdoor Ambient Temperature																							
			65°F				75°F				85°F				95°F				105°F				115°F			
			Entering Indoor Wet Bulb Temperature																							
IDB	Airflow		59	63	67	71	59	63	67	71	59	63	67	71	59	63	67	71	59	63	67	71	59	63	67	71
70	680	MBh	21.2	22.3	23.5		22.3	22.6	23.3		21.7	22.1	22.7		20.7	21.0	21.7		19.5	19.8	20.5		18.4	18.7	19.3	
		S/T	0.61	0.53	0.39		0.61	0.53	0.40		0.64	0.56	0.42		0.66	0.58	0.44		1.00	0.60	0.46		1.00	0.66	0.52	
		ΔT	20	19	13		18	16	13		18	16	13		18	16	13		18	16	13		19	17	14	
		kW	1.44	1.50	1.53		1.73	1.73	1.73		1.95	1.95	1.95		2.19	2.19	2.19		2.46	2.46	2.45		2.77	2.77	2.76	
		Amps	5.1	5.3	5.5		6.4	6.4	6.4		7.3	7.3	7.3		8.4	8.4	8.4		9.5	9.5	9.5		10.9	10.9	10.9	
		Hi PR	256	259	264		302	303	305		345	346	348		391	393	394		442	443	445		495	496	498	
		Lo PR	121	122	127		130	131	134		136	138	141		142	143	146		147	148	152		154	155	158	
	800	MBh	22.3	23.2	23.9		22.7	23.0	23.7		22.1	22.4	23.1		21.1	21.4	22.1		19.8	20.2	20.8		18.7	19.0	19.7	
		S/T	0.68	0.61	0.47		0.69	0.61	0.47		0.72	0.64	0.50		1.00	0.66	0.52		1.00	0.68	0.54		1.00	0.73	0.59	
		ΔT	19	15	12		17	15	12		17	15	12		17	15	12		16	15	12		17	16	13	
		kW	1.52	1.55	1.54		1.74	1.74	1.74		1.96	1.96	1.96		2.20	2.20	2.20		2.47	2.47	2.46		2.78	2.78	2.78	
		Amps	5.4	5.6	5.6		6.4	6.4	6.4		7.4	7.4	7.4		8.4	8.4	8.4		9.6	9.6	9.6		10.9	10.9	10.9	
		Hi PR	261	264	266		305	306	308		348	349	351		394	395	397		444	445	447		498	499	501	
		Lo PR	123	126	129		132	133	136		138	140	143		144	145	148		149	151	154		156	157	161	
	920	MBh	23.3	23.6	24.3		23.1	23.4	24.1		22.5	22.8	23.5		21.5	21.8	22.5		20.3	20.6	21.3		19.1	19.5	20.1	
		S/T	0.72	0.64	0.51		0.73	0.65	0.51		0.76	0.68	0.54		1.00	0.70	0.56		1.00	0.72	0.58		1.00	0.77	0.63	
		ΔT	16	14	11		16	14	11		16	14	11		16	14	11		15	14	11		16	15	12	
		kW	1.56	1.56	1.55		1.76	1.75	1.75		1.98	1.97	1.97		2.21	2.21	2.21		2.48	2.48	2.47		2.79	2.79	2.79	
		Amps	5.6	5.6	5.6		6.5	6.5	6.5		7.4	7.4	7.4		8.5	8.5	8.5		9.6	9.6	9.6		11.0	11.0	11.0	
		Hi PR	266	267	269		307	308	310		350	351	353		397	398	400		447	448	450		500	501	503	
		Lo PR	127	128	131		134	136	139		141	142	145		146	148	151		152	153	156		158	160	163	
75	680	MBh	21.3	22.3	23.5	24.6	22.3	22.7	23.3	24.4	21.8	22.1	22.7	23.8	20.7	21.1	21.7	22.8	19.5	19.8	20.5	21.5	18.4	18.7	19.4	20.4
		S/T	0.75	0.66	0.52	0.37	0.75	0.67	0.53	0.38	1.00	0.69	0.55	0.41	1.00	0.71	0.57	0.43	1.00	0.74	0.60	0.45	1.00	1.00	0.65	0.50
		ΔT	24	23	17	14	21	20	17	14	22	20	17	14	21	20	17	13	21	19	16	13	22	20	17	14
		kW	1.44	1.50	1.53	1.54	1.73	1.73	1.73	1.74	1.95	1.95	1.95	1.96	2.19	2.19	2.18	2.20	2.46	2.45	2.45	2.47	2.77	2.77	2.76	2.78
		Amps	5.1	5.3	5.5	5.6	6.4	6.4	6.4	6.4	7.3	7.3	7.3	7.4	8.4	8.4	8.3	8.4	9.5	9.5	9.5	9.6	10.9	10.9	10.9	10.9
		Hi PR	257	260	264	268	302	303	305	310	345	346	348	353	392	393	395	399	442	443	445	449	495	496	498	503
		Lo PR	121	122	127	132	130	131	134	139	136	138	141	146	142	143	146	151	147	148	152	157	154	155	158	164
	800	MBh	22.3	23.2	23.9	24.9	22.7	23.0	23.7	24.7	22.1	22.4	23.1	24.1	21.1	**21.4**	22.1	23.1	19.8	20.2	20.8	21.9	18.7	19.0	19.7	20.7
		S/T	0.82	0.74	0.60	0.45	0.82	0.74	0.61	0.46	1.00	0.77	0.63	0.48	1.00	**0.79**	0.65	0.50	1.00	0.81	0.67	0.53	1.00	1.00	0.73	0.58
		ΔT	23	19	15	12	20	18	15	12	20	19	16	13	20	**18**	15	12	20	18	15	12	21	19	16	13
		kW	1.52	1.54	1.54	1.56	1.74	1.74	1.74	1.75	1.96	1.96	1.96	1.97	2.20	**2.20**	2.20	2.21	2.47	2.47	2.46	2.48	2.78	2.78	2.78	2.79
		Amps	5.4	5.6	5.6	5.6	6.4	6.4	6.4	6.5	7.4	7.4	7.4	7.4	8.4	**8.4**	8.4	8.5	9.6	9.6	9.6	9.6	10.9	10.9	10.9	11.0
		Hi PR	261	265	267	271	305	306	308	312	348	349	351	355	394	**396**	397	402	445	446	447	452	498	499	501	506
		Lo PR	123	126	129	134	132	133	136	142	138	140	143	148	144	**145**	148	154	149	151	154	159	156	157	161	166
	920	MBh	23.3	23.7	24.3	25.4	23.1	23.4	24.1	25.2	22.5	22.9	23.5	24.6	21.5	21.8	22.5	23.5	20.3	20.6	21.3	22.3	19.2	19.5	20.1	21.2
		S/T	0.86	0.78	0.64	0.49	1.00	0.78	0.64	0.50	1.00	0.81	0.67	0.52	1.00	0.83	0.69	0.54	1.00	0.85	0.71	0.57	1.00	1.00	0.77	0.62
		ΔT	19	18	15	11	19	18	14	11	19	18	15	12	19	17	14	11	19	17	14	11	20	18	15	12
		kW	1.56	1.56	1.55	1.57	1.75	1.75	1.75	1.76	1.97	1.97	1.97	1.98	2.21	2.21	2.21	2.22	2.48	2.48	2.47	2.49	2.79	2.79	2.79	2.80
		Amps	5.6	5.6	5.6	5.7	6.5	6.5	6.5	6.5	7.4	7.4	7.4	7.5	8.5	8.5	8.4	8.5	9.6	9.6	9.6	9.7	11.0	11.0	11.0	11.0
		Hi PR	266	267	269	274	307	308	310	315	351	352	353	358	397	398	400	405	447	448	450	455	501	502	504	508
		Lo PR	127	128	131	137	134	136	139	144	141	142	145	150	146	148	151	156	152	153	156	161	158	160	163	168

IDB = Entering Indoor Dry Bulb Temperature

Shaded area is ACCA (TVA) conditions

kW = Total system power

High and low pressures are measured at the liquid and suction service valves.

Amps = outdoor unit amps (comp.+fan)

Airflow may vary depending on actual ambient conditions and system operation modes.

Expanded Cooling Data — DX6VSA241WA* / DV24FECB14A* (cont.)

			Outdoor Ambient Temperature																							
			65°F				75°F				85°F				95°F				105°F				115°F			
			Entering Indoor Wet Bulb Temperature																							
IDB	Airflow		59	63	67	71	59	63	67	71	59	63	67	71	59	63	67	71	59	63	67	71	59	63	67	71
80	680	MBh	21.4	22.4	23.7	24.7	22.5	22.8	23.5	24.5	21.9	22.2	22.9	23.9	20.9	21.2	21.8	22.9	19.6	19.9	20.6	21.6	18.5	18.8	19.5	20.5
		S/T	0.88	0.79	0.65	0.50	1.00	0.80	0.66	0.51	1.00	0.82	0.68	0.54	1.00	0.84	0.70	0.56	1.00	1.00	0.73	0.58	1.00	1.00	0.78	0.63
		ΔT	29	27	20	17	25	23	20	17	25	24	20	17	25	23	20	17	25	23	20	17	26	24	21	18
		kW	1.44	1.50	1.53	1.55	1.73	1.73	1.73	1.74	1.95	1.95	1.95	1.96	2.19	2.19	2.19	2.20	2.46	2.45	2.45	2.47	2.77	2.77	2.76	2.78
		Amps	5.1	5.3	5.5	5.6	6.4	6.4	6.4	6.4	7.3	7.3	7.3	7.4	8.4	8.4	8.4	8.4	9.5	9.5	9.5	9.6	10.9	10.9	10.9	10.9
		Hi PR	257	260	264	269	303	304	306	310	346	347	349	353	392	393	395	400	442	443	445	450	496	497	499	503
		Lo PR	122	123	127	132	130	132	135	140	137	138	141	146	142	144	147	152	148	149	152	157	154	156	159	164
	800	MBh	22.4	23.3	24.0	25.0	22.8	23.1	23.8	24.8	22.2	22.5	23.2	24.2	21.2	21.5	**22.2**	23.2	20.0	20.3	21.0	22.0	18.8	19.2	19.8	20.9
		S/T	1.00	0.87	0.73	0.58	1.00	0.87	0.73	0.59	1.00	0.90	0.76	0.61	1.00	1.00	**0.78**	0.63	1.00	1.00	0.80	0.66	1.00	1.00	0.86	0.71
		ΔT	27	22	19	16	24	22	19	16	24	22	19	16	24	22	**19**	16	23	22	19	16	24	23	20	17
		kW	1.52	1.55	1.54	1.56	1.74	1.74	1.74	1.75	1.96	1.96	1.96	1.97	2.20	2.20	**2.20**	2.21	2.47	2.47	2.46	2.48	2.78	2.78	2.78	2.79
		Amps	5.4	5.6	5.6	5.6	6.4	6.4	6.4	6.5	7.4	7.4	7.4	7.4	8.4	8.4	**8.4**	8.5	9.6	9.6	9.6	9.6	10.9	10.9	10.9	11.0
		Hi PR	262	265	267	272	305	306	308	313	348	350	351	356	395	396	**398**	402	445	446	448	453	498	500	501	506
		Lo PR	123	126	129	135	132	134	137	142	139	140	143	149	144	146	**149**	154	150	151	154	160	156	158	161	166
	920	MBh	23.4	23.8	24.4	25.5	23.2	23.6	24.2	25.3	22.7	23.0	23.7	24.7	21.6	22.0	22.6	23.7	20.4	20.7	21.4	22.4	19.3	19.6	20.3	21.3
		S/T	1.00	0.91	0.77	0.62	1.00	0.91	0.77	0.63	1.00	0.94	0.80	0.65	1.00	1.00	0.82	0.67	1.00	1.00	0.84	0.70	1.00	1.00	0.89	0.75
		ΔT	23	21	18	15	23	21	18	15	23	21	18	15	23	21	18	15	22	21	18	15	24	22	19	16
		kW	1.56	1.56	1.55	1.57	1.75	1.75	1.75	1.76	1.97	1.97	1.97	1.99	2.21	2.21	2.21	2.22	2.48	2.48	2.47	2.49	2.79	2.79	2.79	2.80
		Amps	5.6	5.6	5.6	5.7	6.5	6.5	6.5	6.5	7.4	7.4	7.4	7.5	8.5	8.5	8.4	8.5	9.6	9.6	9.6	9.7	11.0	11.0	11.0	11.0
		Hi PR	267	268	270	274	308	309	311	315	351	352	354	359	397	399	400	405	448	449	451	455	501	502	504	509
		Lo PR	127	129	132	137	135	136	139	144	141	143	146	151	147	148	151	157	152	154	157	162	159	160	164	169
85	680	MBh	21.7	22.8	24.0	25.1	22.8	23.2	23.8	24.9	22.3	22.6	23.2	24.3	21.2	21.6	22.2	23.3	20.0	20.3	21.0	22.0	18.9	19.2	19.9	20.9
		S/T	1.00	0.89	0.75	0.61	1.00	0.90	0.76	0.61	1.00	1.00	0.79	0.64	1.00	1.00	0.81	0.66	1.00	1.00	0.83	0.68	1.00	1.00	1.00	0.74
		ΔT	32	30	23	20	28	26	23	20	28	27	24	21	28	26	23	20	28	26	23	20	29	27	24	21
		kW	1.44	1.51	1.53	1.55	1.74	1.73	1.73	1.75	1.96	1.95	1.95	1.97	2.19	2.19	2.19	2.20	2.46	2.46	2.46	2.47	2.77	2.77	2.77	2.78
		Amps	5.1	5.4	5.5	5.6	6.4	6.4	6.4	6.4	7.4	7.3	7.3	7.4	8.4	8.4	8.4	8.4	9.5	9.5	9.5	9.6	10.9	10.9	10.9	10.9
		Hi PR	258	261	266	270	304	305	307	311	347	348	350	354	393	395	396	401	444	445	447	451	497	498	500	505
		Lo PR	124	125	129	134	132	133	137	142	138	140	143	148	144	145	149	154	149	151	154	159	156	158	161	166
	800	MBh	22.8	23.7	24.4	25.4	23.2	23.5	24.2	25.2	22.6	22.9	23.6	24.6	21.6	21.9	22.6	23.6	20.3	20.7	21.3	22.4	19.2	19.5	20.2	21.2
		S/T	1.00	0.97	0.83	0.69	1.00	1.00	0.84	0.69	1.00	1.00	0.86	0.72	1.00	1.00	0.88	0.74	1.00	1.00	0.91	0.76	1.00	1.00	1.00	0.81
		ΔT	31	25	22	19	27	25	22	19	27	25	22	19	27	25	22	19	27	25	22	19	28	26	23	20
		kW	1.52	1.55	1.55	1.56	1.75	1.75	1.74	1.76	1.97	1.97	1.96	1.98	2.21	2.21	2.20	2.22	2.47	2.47	2.47	2.48	2.79	2.78	2.78	2.80
		Amps	5.4	5.6	5.6	5.6	6.5	6.4	6.4	6.5	7.4	7.4	7.4	7.5	8.4	8.4	8.4	8.5	9.6	9.6	9.6	9.6	11.0	11.0	10.9	11.0
		Hi PR	263	266	268	273	306	308	309	314	350	351	353	357	396	397	399	404	446	447	449	454	500	501	503	507
		Lo PR	125	128	131	136	134	136	139	144	141	142	145	150	146	148	151	156	152	153	156	161	158	160	163	168
	920	MBh	23.8	24.1	24.8	25.9	23.6	23.9	24.6	25.7	23.0	23.4	24.0	25.1	22.0	22.3	23.0	24.0	20.8	21.1	21.8	22.8	19.7	20.0	20.6	21.7
		S/T	1.00	1.00	0.87	0.72	1.00	1.00	0.88	0.73	1.00	1.00	0.90	0.76	1.00	1.00	0.92	0.78	1.00	1.00	1.00	0.80	1.00	1.00	1.00	0.85
		ΔT	26	24	21	18	26	24	21	18	26	25	21	18	26	24	21	18	26	24	21	18	27	25	22	19
		kW	1.56	1.56	1.56	1.57	1.76	1.76	1.75	1.77	1.98	1.98	1.97	1.99	2.22	2.22	2.21	2.23	2.48	2.48	2.48	2.49	2.80	2.79	2.79	2.81
		Amps	5.6	5.6	5.6	5.7	6.5	6.5	6.5	6.5	7.5	7.4	7.4	7.5	8.5	8.5	8.5	8.5	9.6	9.6	9.6	9.7	11.0	11.0	11.0	11.0
		Hi PR	268	269	271	275	309	310	312	317	352	353	355	360	399	400	402	406	449	450	452	456	502	503	505	510
		Lo PR	129	131	134	139	136	138	141	146	143	145	148	153	149	150	153	158	154	155	159	164	161	162	165	171

IDB = Entering Indoor Dry Bulb Temperature

Shaded area is AHRI conditions

kW = Total system power

High and low pressures are measured at the liquid and suction service valves.

Amps = outdoor unit amps (comp.+fan)

Airflow may vary depending on actual ambient conditions and system operation modes.

Expanded Cooling Data — DX6VSA301WA* / DV36FCC14A*

			Outdoor Ambient Temperature																							
			65°F				75°F				85°F				95°F				105°F				115°F			
			Entering Indoor Wet Bulb Temperature																							
IDB	Airflow		59	63	67	71	59	63	67	71	59	63	67	71	59	63	67	71	59	63	67	71	59	63	67	71
70	860	MBh	25.8	27.5	29.5		28.0	28.4	29.2		27.2	27.6	28.5		26.0	26.4	27.2		24.4	24.8	25.6		23.0	23.4	24.2	
		S/T	0.61	0.54	0.38		0.61	0.53	0.39		0.63	0.55	0.42		1.00	0.57	0.44		1.00	0.60	0.46		1.00	0.65	0.51	
		ΔT	20	18	13		17	16	13		18	16	13		17	16	13		17	16	13		18	17	14	
		kW	1.71	1.87	1.97		2.22	2.22	2.22		2.50	2.50	2.49		2.80	2.80	2.79		3.13	3.13	3.13		3.53	3.53	3.52	
		Amps	6.1	6.6	7.0		8.1	8.1	8.1		9.3	9.3	9.3		10.6	10.6	10.6		12.1	12.1	12.1		13.8	13.8	13.8	
		Hi PR	265	269	274		314	315	317		358	360	362		407	408	410		459	460	462		514	516	517	
		Lo PR	124	125	129		132	133	136		138	140	143		144	145	149		149	151	154		156	158	161	
	1010	MBh	27.5	29.1	29.9		28.4	28.8	29.6		27.7	28.1	28.9		26.4	26.8	27.6		24.8	25.2	26.1		23.4	23.8	24.7	
		S/T	0.69	0.60	0.46		0.68	0.60	0.47		0.71	0.63	0.49		1.00	0.65	0.51		1.00	0.67	0.53		1.00	0.72	0.59	
		ΔT	19	15	12		16	15	12		16	15	12		16	15	12		16	14	11		17	15	12	
		kW	1.88	1.99	1.98		2.24	2.24	2.23		2.51	2.51	2.51		2.81	2.81	2.81		3.15	3.15	3.14		3.54	3.54	3.54	
		Amps	6.7	7.1	7.1		8.2	8.2	8.2		9.4	9.4	9.4		10.7	10.7	10.7		12.2	12.1	12.1		13.9	13.9	13.8	
		Hi PR	271	275	277		316	318	319		361	362	364		409	411	413		462	463	465		517	518	520	
		Lo PR	125	128	131		134	135	138		140	142	145		146	148	151		151	153	156		158	160	163	
	1160	MBh	29.2	29.6	30.4		28.9	29.3	30.2		28.2	28.6	29.4		26.9	27.3	28.2		25.4	25.8	26.6		24.0	24.4	25.2	
		S/T	0.71	0.64	0.50		0.72	0.64	0.51		0.75	0.67	0.53		1.00	0.69	0.55		1.00	0.71	0.57		1.00	0.76	0.62	
		ΔT	15	14	11		15	14	11		16	14	11		15	14	11		15	13	10		16	14	11	
		kW	2.00	2.00	2.00		2.25	2.25	2.24		2.53	2.53	2.52		2.83	2.83	2.82		3.16	3.16	3.16		3.56	3.55	3.55	
		Amps	7.2	7.2	7.1		8.2	8.2	8.2		9.5	9.4	9.4		10.8	10.7	10.7		12.2	12.2	12.2		13.9	13.9	13.9	
		Hi PR	276	277	279		319	320	322		364	365	367		412	413	415		464	465	467		520	521	523	
		Lo PR	129	130	133		136	138	141		143	144	148		148	150	153		154	155	159		161	162	165	
75	860	MBh	25.8	27.5	29.5	30.8	28.0	28.4	29.2	30.5	27.2	27.6	28.5	29.8	26.0	26.4	27.2	28.5	24.4	24.8	25.7	27.0	23.0	23.4	24.2	25.5
		S/T	0.75	0.67	0.52	0.37	0.74	0.66	0.52	0.38	1.00	0.69	0.55	0.40	1.00	0.70	0.57	0.42	1.00	0.73	0.59	0.44	1.00	1.00	0.64	0.50
		ΔT	24	22	16	13	21	19	16	13	21	20	17	13	21	19	16	13	21	19	16	13	22	20	17	14
		kW	1.71	1.87	1.97	1.98	2.22	2.22	2.21	2.23	2.50	2.50	2.49	2.51	2.80	2.80	2.79	2.81	3.13	3.13	3.13	3.15	3.53	3.52	3.52	3.54
		Amps	6.1	6.6	7.0	7.1	8.1	8.1	8.1	8.2	9.3	9.3	9.3	9.4	10.6	10.6	10.6	10.7	12.1	12.1	12.1	12.1	13.8	13.8	13.8	13.8
		Hi PR	265	269	274	279	314	315	317	322	359	360	362	366	407	408	410	415	459	460	462	467	515	516	518	522
		Lo PR	124	125	129	134	132	133	136	142	138	140	143	148	144	145	149	154	149	151	154	159	156	158	161	166
	1010	MBh	27.5	29.1	29.9	31.2	28.4	28.8	29.7	31.0	27.7	28.1	28.9	30.2	26.4	**26.8**	27.7	28.9	24.9	25.3	26.1	27.4	23.4	23.8	24.7	26.0
		S/T	0.83	0.73	0.59	0.45	1.00	0.74	0.60	0.45	1.00	0.76	0.62	0.48	1.00	**0.78**	0.64	0.50	1.00	0.80	0.67	0.52	1.00	1.00	0.72	0.57
		ΔT	23	18	15	12	20	18	15	12	20	18	15	12	20	**18**	15	12	20	18	15	12	21	19	16	13
		kW	1.88	1.99	1.98	2.00	2.24	2.23	2.23	2.25	2.51	2.51	2.51	2.53	2.81	**2.81**	2.81	2.83	3.15	3.15	3.14	3.16	3.54	3.54	3.54	3.55
		Amps	6.6	7.1	7.1	7.2	8.2	8.2	8.2	8.2	9.4	9.4	9.4	9.4	10.7	**10.7**	10.7	10.7	12.1	12.1	12.1	12.2	13.9	13.9	13.8	13.9
		Hi PR	271	275	277	282	317	318	320	324	361	363	365	369	410	**411**	413	418	462	463	465	470	517	519	520	525
		Lo PR	125	128	131	136	134	135	138	144	140	142	145	150	146	**148**	151	156	152	153	156	162	158	160	163	168
	1160	MBh	29.2	29.6	30.5	31.7	29.0	29.4	30.2	31.5	28.2	28.6	29.5	30.8	26.9	27.3	28.2	29.5	25.4	25.8	26.6	27.9	24.0	24.4	25.2	26.5
		S/T	0.84	0.77	0.63	0.48	1.00	0.77	0.64	0.49	1.00	0.80	0.66	0.52	1.00	0.82	0.68	0.54	1.00	1.00	0.70	0.56	1.00	1.00	0.76	0.61
		ΔT	19	17	14	11	19	17	14	11	19	17	14	11	19	17	14	11	19	17	14	11	20	18	15	12
		kW	2.00	2.00	1.99	2.01	2.25	2.25	2.24	2.26	2.53	2.52	2.52	2.54	2.83	2.82	2.82	2.84	3.16	3.16	3.15	3.17	3.55	3.55	3.55	3.57
		Amps	7.2	7.2	7.1	7.2	8.2	8.2	8.2	8.3	9.4	9.4	9.4	9.5	10.7	10.7	10.7	10.8	12.2	12.2	12.2	12.3	13.9	13.9	13.9	14.0
		Hi PR	276	278	280	284	319	320	322	327	364	365	367	372	412	414	415	420	464	466	468	472	520	521	523	528
		Lo PR	129	130	133	139	136	138	141	146	143	144	148	153	148	150	153	158	154	155	159	164	161	162	166	171

IDB = Entering Indoor Dry Bulb Temperature

Shaded area is ACCA (TVA) conditions

kW = Total system power

High and low pressures are measured at the liquid and suction service valves.

Amps = outdoor unit amps (comp.+fan)

Airflow may vary depending on actual ambient conditions and system operation modes.

Expanded Cooling Data — DX6VSA301WA* / DV36FCC14A* (cont.)

			Outdoor Ambient Temperature																							
			65°F				75°F				85°F				95°F				105°F				115°F			
			Entering Indoor Wet Bulb Temperature																							
IDB	Airflow		59	63	67	71	59	63	67	71	59	63	67	71	59	63	67	71	59	63	67	71	59	63	67	71
80	860	MBh	25.9	27.6	29.6	30.9	28.1	28.5	29.4	30.7	27.4	27.8	28.6	29.9	26.1	26.5	27.4	28.7	24.6	25.0	25.8	27.1	23.2	23.5	24.4	25.7
		S/T	1.00	0.80	0.64	0.50	1.00	0.79	0.65	0.50	1.00	0.81	0.67	0.53	1.00	1.00	0.69	0.55	1.00	1.00	0.72	0.57	1.00	1.00	0.77	0.62
		ΔT	28	26	20	17	24	23	20	17	25	23	20	17	24	23	20	17	24	23	20	17	25	24	21	18
		kW	1.71	1.87	1.97	1.99	2.22	2.22	2.22	2.23	2.50	2.50	2.49	2.51	2.80	2.80	2.79	2.81	3.13	3.13	3.13	3.15	3.53	3.52	3.52	3.54
		Amps	6.1	6.6	7.0	7.1	8.1	8.1	8.1	8.2	9.3	9.3	9.3	9.4	10.6	10.6	10.6	10.7	12.1	12.1	12.1	12.1	13.8	13.8	13.8	13.9
		Hi PR	266	270	275	279	314	316	317	322	359	360	362	367	407	409	411	415	460	461	463	467	515	516	518	523
		Lo PR	124	125	129	135	132	134	137	142	139	140	143	149	144	146	149	154	150	151	155	160	157	158	161	167
	1010	MBh	27.7	29.2	30.1	31.4	28.6	29.0	29.8	31.1	27.8	28.2	29.1	30.4	26.6	27.0	**27.8**	29.1	25.0	25.4	26.2	27.5	23.6	24.0	24.8	26.1
		S/T	1.00	0.86	0.72	0.57	1.00	0.86	0.73	0.58	1.00	0.89	0.75	0.61	1.00	1.00	**0.77**	0.63	1.00	1.00	0.79	0.65	1.00	1.00	0.84	0.70
		ΔT	27	22	19	16	23	22	19	16	23	22	19	16	23	22	**19**	16	23	21	18	15	24	22	19	16
		kW	1.88	1.99	1.98	2.00	2.24	2.24	2.23	2.25	2.51	2.51	2.51	2.53	2.81	2.81	**2.81**	2.83	3.15	3.15	3.14	3.16	3.54	3.54	3.54	3.56
		Amps	6.7	7.1	7.1	7.2	8.2	8.2	8.2	8.2	9.4	9.4	9.4	9.4	10.7	10.7	**10.7**	10.8	12.2	12.1	12.1	12.2	13.9	13.9	13.8	13.9
		Hi PR	271	275	277	282	317	318	320	325	362	363	365	370	410	411	**413**	418	462	463	465	470	518	519	521	526
		Lo PR	126	128	131	137	134	136	139	144	141	142	146	151	147	148	**151**	157	152	154	157	162	159	160	164	169
	1160	MBh	29.4	29.8	30.6	31.9	29.1	29.5	30.3	31.6	28.4	28.8	29.6	30.9	27.1	27.5	28.3	29.6	25.5	25.9	26.8	28.1	24.1	24.5	25.4	26.7
		S/T	1.00	0.89	0.76	0.61	1.00	0.90	0.76	0.62	1.00	0.93	0.79	0.64	1.00	1.00	0.81	0.66	1.00	1.00	0.83	0.69	1.00	1.00	0.88	0.74
		ΔT	22	21	18	15	22	21	18	15	23	21	18	15	22	21	18	15	22	20	18	14	23	21	19	15
		kW	2.00	2.00	2.00	2.01	2.25	2.25	2.24	2.26	2.53	2.52	2.52	2.54	2.83	2.82	2.82	2.84	3.16	3.16	3.16	3.17	3.56	3.55	3.55	3.57
		Amps	7.2	7.2	7.1	7.2	8.2	8.2	8.2	8.3	9.4	9.4	9.4	9.5	10.8	10.7	10.7	10.8	12.2	12.2	12.2	12.3	13.9	13.9	13.9	14.0
		Hi PR	277	278	280	285	320	321	323	328	365	366	368	372	413	414	416	421	465	466	468	473	520	522	524	528
		Lo PR	129	131	134	139	137	138	141	147	143	145	148	153	149	151	154	159	154	156	159	164	161	163	166	171
85	860	MBh	26.4	28.1	30.1	31.4	28.6	29.0	29.9	31.1	27.9	28.3	29.1	30.4	26.6	27.0	27.8	29.1	25.0	25.4	26.3	27.6	23.6	24.0	24.9	26.2
		S/T	1.00	0.91	0.75	0.60	1.00	1.00	0.75	0.61	1.00	1.00	0.78	0.63	1.00	1.00	0.80	0.65	1.00	1.00	0.82	0.67	1.00	1.00	1.00	0.73
		ΔT	32	30	23	20	28	26	23	20	28	26	23	20	28	26	23	20	27	26	23	20	28	27	24	21
		kW	1.72	1.87	1.97	1.99	2.23	2.22	2.22	2.24	2.50	2.50	2.50	2.52	2.80	2.80	2.80	2.82	3.14	3.14	3.13	3.15	3.53	3.53	3.53	3.54
		Amps	6.1	6.6	7.0	7.1	8.1	8.1	8.1	8.2	9.3	9.3	9.3	9.4	10.7	10.6	10.6	10.7	12.1	12.1	12.1	12.2	13.8	13.8	13.8	13.9
		Hi PR	267	271	276	281	316	317	319	323	360	362	364	368	409	410	412	417	461	462	464	469	516	518	519	524
		Lo PR	126	127	131	136	134	136	139	144	141	142	145	151	146	148	151	156	152	153	156	162	159	160	163	169
	1010	MBh	28.1	29.7	30.5	31.8	29.0	29.4	30.3	31.6	28.3	28.7	29.5	30.8	27.0	27.4	28.3	29.6	25.5	25.9	26.7	28.0	24.1	24.5	25.3	26.6
		S/T	1.00	0.96	0.82	0.68	1.00	1.00	0.83	0.68	1.00	1.00	0.85	0.71	1.00	1.00	0.87	0.73	1.00	1.00	1.00	0.75	1.00	1.00	1.00	0.80
		ΔT	30	25	22	19	26	25	22	19	27	25	22	19	26	25	22	19	26	25	22	19	27	26	23	20
		kW	1.89	1.99	1.99	2.01	2.24	2.24	2.24	2.25	2.52	2.52	2.51	2.53	2.82	2.82	2.81	2.83	3.15	3.15	3.15	3.17	3.55	3.55	3.54	3.56
		Amps	6.7	7.1	7.1	7.2	8.2	8.2	8.2	8.3	9.4	9.4	9.4	9.5	10.7	10.7	10.7	10.8	12.2	12.2	12.1	12.2	13.9	13.9	13.9	13.9
		Hi PR	273	277	279	283	318	320	321	326	363	364	366	371	411	413	415	419	464	465	467	471	519	520	522	527
		Lo PR	128	130	133	139	136	138	141	146	143	144	148	153	148	150	153	158	154	155	159	164	161	162	166	171
	1160	MBh	29.8	30.2	31.1	32.4	29.6	30.0	30.8	32.1	28.8	29.2	30.1	31.4	27.6	28.0	28.8	30.1	26.0	26.4	27.3	28.6	24.6	25.0	25.8	27.1
		S/T	1.00	1.00	0.86	0.71	1.00	1.00	0.87	0.72	1.00	1.00	0.89	0.75	1.00	1.00	0.91	0.77	1.00	1.00	1.00	0.79	1.00	1.00	1.00	0.84
		ΔT	25	24	21	18	25	24	21	18	26	24	21	18	25	24	21	18	25	24	21	18	26	25	22	19
		kW	2.01	2.00	2.00	2.02	2.25	2.25	2.25	2.27	2.53	2.53	2.53	2.54	2.83	2.83	2.83	2.84	3.17	3.16	3.16	3.18	3.56	3.56	3.55	3.57
		Amps	7.2	7.2	7.2	7.2	8.3	8.3	8.2	8.3	9.5	9.5	9.4	9.5	10.8	10.8	10.7	10.8	12.2	12.2	12.2	12.3	13.9	13.9	13.9	14.0
		Hi PR	278	279	281	286	321	322	324	329	366	367	369	374	414	415	417	422	466	467	469	474	522	523	525	530
		Lo PR	131	133	136	141	139	140	143	149	145	147	150	155	151	152	156	161	156	158	161	166	163	165	168	173

IDB = Entering Indoor Dry Bulb Temperature

Shaded area is AHRI conditions

kW = Total system power

High and low pressures are measured at the liquid and suction service valves.

Amps = outdoor unit amps (comp.+fan)

Airflow may vary depending on actual ambient conditions and system operation modes.

Expanded Cooling Data — DX6VSA361WA* / CAPEA3026*4A* + MBVC1600**-1A*

			Outdoor Ambient Temperature																							
			65°F				75°F				85°F				95°F				105°F				115°F			
			Entering Indoor Wet Bulb Temperature																							
IDB	Airflow		59	63	67	71	59	63	67	71	59	63	67	71	59	63	67	71	59	63	67	71	59	63	67	71
70	1070	MBh	30.6	32.7	34.3		32.6	33.1	34.0		31.7	32.2	33.2		30.2	30.7	31.7		28.4	28.9	29.9		26.8	27.2	28.2	
		S/T	0.63	0.54	0.37		0.59	0.51	0.38		0.61	0.54	0.40		0.63	0.56	0.42		1.00	0.58	0.45		1.00	0.63	0.50	
		ΔT	19	18	12		16	14	12		16	15	12		16	14	12		16	14	11		17	15	12	
		kW	2.05	2.21	2.30		2.60	2.60	2.59		2.93	2.93	2.93		3.29	3.29	3.29		3.70	3.69	3.69		4.17	4.17	4.16	
		Amps	7.5	8.1	8.3		9.7	9.6	9.6		11.1	11.1	11.1		12.7	12.7	12.6		14.4	14.4	14.4		16.5	16.5	16.4	
		Hi PR	266	269	274		314	315	317		359	360	362		407	408	410		459	460	462		515	516	518	
		Lo PR	121	122	126		129	130	133		135	137	140		141	142	145		146	147	151		153	154	157	
	1260	MBh	32.7	33.9	34.8		33.1	33.6	34.6		32.2	32.7	33.7		30.8	31.2	32.2		28.9	29.4	30.4		27.3	27.8	28.7	
		S/T	0.70	0.58	0.45		0.66	0.59	0.45		0.69	0.61	0.48		0.71	0.63	0.50		1.00	0.65	0.52		1.00	0.71	0.57	
		ΔT	18	13	11		15	13	11		15	14	11		15	13	11		15	13	10		15	14	11	
		kW	2.23	2.32	2.32		2.62	2.62	2.61		2.95	2.95	2.95		3.31	3.31	3.31		3.72	3.71	3.71		4.19	4.19	4.18	
		Amps	8.2	8.4	8.4		9.7	9.7	9.7		11.2	11.2	11.1		12.7	12.7	12.7		14.5	14.5	14.5		16.5	16.5	16.5	
		Hi PR	271	275	277		317	318	320		362	363	365		410	411	413		462	463	465		518	519	521	
		Lo PR	122	125	128		131	132	135		137	139	142		143	144	147		148	150	153		155	156	159	
	1450	MBh	34.0	34.5	35.5		33.7	34.2	35.2		32.9	33.3	34.3		31.4	31.9	32.8		29.6	30.1	31.0		27.9	28.4	29.4	
		S/T	0.70	0.62	0.49		0.70	0.63	0.49		0.73	0.65	0.52		1.00	0.67	0.54		1.00	0.69	0.56		1.00	0.74	0.61	
		ΔT	14	12	10		14	12	10		14	13	10		14	12	10		14	12	10		15	13	10	
		kW	2.34	2.34	2.33		2.64	2.63	2.63		2.97	2.97	2.96		3.33	3.33	3.32		3.73	3.73	3.72		4.20	4.20	4.20	
		Amps	8.5	8.5	8.5		9.8	9.8	9.8		11.2	11.2	11.2		12.8	12.8	12.8		14.6	14.6	14.5		16.6	16.6	16.6	
		Hi PR	277	278	280		319	321	323		364	366	367		413	414	416		465	466	468		520	522	524	
		Lo PR	126	127	130		133	135	138		140	141	144		145	147	150		150	152	155		157	159	162	
75	1070	MBh	30.6	32.7	34.4	35.9	32.6	33.1	34.1	35.6	31.7	32.2	33.2	34.7	30.3	30.7	31.7	33.2	28.5	28.9	29.9	31.4	26.8	27.3	28.3	27.7
		S/T	0.77	0.68	0.50	0.36	0.72	0.64	0.51	0.37	1.00	0.67	0.53	0.39	1.00	0.69	0.55	0.41	1.00	0.71	0.57	0.43	1.00	0.76	0.62	0.52
		ΔT	23	21	15	12	19	18	15	12	19	18	15	12	19	18	15	12	19	17	15	12	20	18	16	15
		kW	2.04	2.21	2.29	2.32	2.60	2.60	2.59	2.62	2.93	2.93	2.93	2.95	3.29	3.29	3.29	3.31	3.70	3.69	3.69	3.71	4.17	4.16	4.16	3.69
		Amps	7.5	8.1	8.3	8.4	9.6	9.6	9.6	9.7	11.1	11.1	11.1	11.2	12.7	12.6	12.6	12.7	14.4	14.4	14.4	14.5	16.5	16.4	16.4	14.6
		Hi PR	266	270	274	279	314	315	317	322	359	360	362	367	407	409	410	415	460	461	463	467	515	516	518	513
		Lo PR	121	122	126	131	129	130	133	138	135	137	140	145	141	142	145	150	146	147	151	156	153	154	157	163
	1260	MBh	32.8	33.9	34.9	36.4	33.1	33.6	34.6	36.1	32.3	32.7	33.7	35.2	30.8	**31.2**	32.2	33.7	29.0	29.4	30.4	31.9	27.3	27.8	28.8	28.2
		S/T	0.84	0.71	0.58	0.44	0.79	0.72	0.58	0.44	1.00	0.74	0.61	0.47	1.00	**0.76**	0.63	0.49	1.00	0.78	0.65	0.51	1.00	1.00	0.70	0.60
		ΔT	22	17	14	11	18	17	14	11	18	17	14	11	18	**17**	14	11	18	16	14	11	19	17	15	14
		kW	2.23	2.32	2.31	2.34	2.62	2.62	2.61	2.63	2.95	2.95	2.94	2.97	3.31	**3.31**	3.30	3.33	3.71	3.71	3.71	3.73	4.19	4.18	4.18	3.70
		Amps	8.2	8.4	8.4	8.5	9.7	9.7	9.7	9.8	11.2	11.2	11.1	11.2	12.7	**12.7**	12.7	12.8	14.5	14.5	14.5	14.6	16.5	16.5	16.5	14.7
		Hi PR	271	275	277	282	317	318	320	325	362	363	365	370	410	**411**	413	418	462	464	465	470	518	519	521	516
		Lo PR	122	125	128	133	131	132	135	141	137	139	142	147	143	**144**	147	152	148	150	153	158	155	156	159	165
	1450	MBh	34.1	34.5	35.5	37.0	33.8	34.2	35.2	36.7	32.9	33.4	34.3	35.9	31.4	31.9	32.9	34.4	29.6	30.1	31.1	32.6	28.0	28.4	29.4	28.8
		S/T	0.82	0.75	0.61	0.47	1.00	0.75	0.62	0.48	1.00	0.78	0.64	0.50	1.00	0.80	0.66	0.52	1.00	0.82	0.69	0.54	1.00	1.00	0.74	0.64
		ΔT	17	16	13	10	17	16	13	10	17	16	13	10	17	16	13	10	17	15	13	10	18	16	14	13
		kW	2.34	2.33	2.33	2.35	2.63	2.63	2.63	2.65	2.97	2.97	2.96	2.98	3.33	3.33	3.32	3.34	3.73	3.73	3.72	3.74	4.20	4.20	4.19	3.71
		Amps	8.5	8.5	8.5	8.6	9.8	9.8	9.8	9.9	11.2	11.2	11.2	11.3	12.8	12.8	12.8	12.9	14.6	14.5	14.5	14.6	16.6	16.6	16.6	14.7
		Hi PR	277	278	280	285	320	321	323	327	365	366	368	372	413	414	416	421	465	466	468	473	521	522	524	518
		Lo PR	126	127	130	136	133	135	138	143	140	141	144	149	145	147	150	155	150	152	155	160	157	159	162	167

IDB = Entering Indoor Dry Bulb Temperature

Shaded area is ACCA (TVA) conditions

kW = Total system power

High and low pressures are measured at the liquid and suction service valves.

Amps = outdoor unit amps (comp.+fan)

Airflow may vary depending on actual ambient conditions and system operation modes.

Expanded Cooling Data — DX6VSA361WA* / CAPEA3026*4A* + MBVC1600**-1A* (cont.)

			Outdoor Ambient Temperature																							
			65°F				75°F				85°F				95°F				105°F				115°F			
			Entering Indoor Wet Bulb Temperature																							
IDB	Airflow		59	63	67	71	59	63	67	71	59	63	67	71	59	63	67	71	59	63	67	71	59	63	67	71
80	1070	MBh	30.8	32.9	34.5	36.0	32.8	33.2	34.2	35.7	31.9	32.4	33.4	34.9	30.4	30.9	31.9	33.4	28.6	29.1	30.1	31.6	27.0	27.4	28.4	27.9
		S/T	0.90	0.81	0.62	0.48	1.00	0.76	0.63	0.49	1.00	0.79	0.66	0.51	1.00	0.81	0.68	0.53	1.00	1.00	0.70	0.56	1.00	1.00	0.75	0.65
		ΔT	27	25	18	15	22	21	18	15	22	21	18	15	22	21	18	15	22	21	18	15	23	22	19	19
		kW	2.05	2.21	2.30	2.32	2.60	2.60	2.59	2.62	2.93	2.93	2.93	2.95	3.29	3.29	3.29	3.31	3.70	3.69	3.69	3.71	4.17	4.17	4.16	3.69
		Amps	7.5	8.1	8.3	8.4	9.7	9.6	9.6	9.7	11.1	11.1	11.1	11.2	12.7	12.7	12.6	12.7	14.4	14.4	14.4	14.5	16.5	16.5	16.4	14.6
		Hi PR	267	270	275	280	315	316	318	322	360	361	363	367	408	409	411	416	460	461	463	468	516	517	519	513
		Lo PR	122	122	126	132	129	131	134	139	136	137	140	145	141	143	146	151	146	148	151	156	153	155	158	163
	1260	MBh	32.9	34.1	35.0	36.5	33.3	33.8	34.7	36.2	32.4	32.9	33.9	35.4	30.9	31.4	**32.4**	33.9	29.1	29.6	30.6	32.1	27.5	28.0	28.9	28.3
		S/T	1.00	0.83	0.70	0.56	1.00	0.84	0.71	0.57	1.00	0.86	0.73	0.59	1.00	0.88	**0.75**	0.61	1.00	1.00	0.77	0.63	1.00	1.00	0.82	0.74
		ΔT	26	20	17	14	21	20	17	14	21	20	17	14	21	20	**17**	14	21	20	17	14	22	20	18	18
		kW	2.23	2.32	2.32	2.34	2.62	2.62	2.61	2.64	2.95	2.95	2.95	2.97	3.31	3.31	**3.31**	3.33	3.72	3.71	3.71	3.73	4.19	4.19	4.18	3.70
		Amps	8.2	8.4	8.4	8.5	9.7	9.7	9.7	9.8	11.2	11.2	11.1	11.2	12.7	12.7	**12.7**	12.8	14.5	14.5	14.5	14.6	16.5	16.5	16.5	14.7
		Hi PR	272	276	278	282	317	319	321	325	362	364	365	370	411	412	**414**	419	463	464	466	471	518	520	522	516
		Lo PR	123	125	128	134	131	133	136	141	138	139	142	148	143	145	**148**	153	149	150	153	158	155	157	160	165
	1450	MBh	34.2	34.7	35.7	37.2	33.9	34.4	35.4	36.9	33.1	33.5	34.5	36.0	31.6	32.1	33.0	34.5	29.8	30.2	31.2	32.7	28.1	28.6	29.6	28.9
		S/T	1.00	0.87	0.74	0.60	1.00	0.88	0.74	0.60	1.00	0.90	0.77	0.63	1.00	1.00	0.79	0.65	1.00	1.00	0.81	0.67	1.00	1.00	0.86	0.78
		ΔT	20	19	16	13	20	19	16	13	21	19	16	14	20	19	16	13	20	19	16	13	21	20	17	17
		kW	2.34	2.34	2.33	2.35	2.64	2.63	2.63	2.65	2.97	2.97	2.96	2.98	3.33	3.33	3.32	3.34	3.73	3.73	3.72	3.75	4.20	4.20	4.20	3.72
		Amps	8.5	8.5	8.5	8.6	9.8	9.8	9.8	9.9	11.2	11.2	11.2	11.3	12.8	12.8	12.8	12.9	14.6	14.6	14.5	14.6	16.6	16.6	16.6	14.7
		Hi PR	277	279	280	285	320	321	323	328	365	366	368	373	413	415	417	421	466	467	469	473	521	522	524	519
		Lo PR	126	128	131	136	134	135	138	143	140	142	145	150	146	147	150	155	151	153	156	161	158	159	162	168
85	1070	MBh	31.3	33.4	35.1	36.6	33.3	33.8	34.8	36.3	32.5	32.9	33.9	35.4	31.0	31.5	32.4	33.9	29.2	29.6	30.6	32.1	27.5	28.0	29.0	28.4
		S/T	1.00	0.92	0.72	0.58	1.00	0.87	0.73	0.59	1.00	1.00	0.76	0.61	1.00	1.00	0.78	0.63	1.00	1.00	0.80	0.66	1.00	1.00	1.00	0.76
		ΔT	30	29	21	18	25	24	21	18	25	24	21	18	25	24	21	18	25	23	21	18	26	24	22	23
		kW	2.05	2.21	2.30	2.32	2.61	2.61	2.60	2.62	2.94	2.94	2.93	2.96	3.30	3.30	3.29	3.32	3.70	3.70	3.69	3.72	4.17	4.17	4.17	3.69
		Amps	7.5	8.2	8.3	8.4	9.7	9.7	9.6	9.7	11.1	11.1	11.1	11.2	12.7	12.7	12.7	12.8	14.4	14.4	14.4	14.5	16.5	16.5	16.5	14.6
		Hi PR	268	271	276	281	316	317	319	324	361	362	364	369	409	410	412	417	461	462	464	469	517	518	520	515
		Lo PR	124	124	128	133	131	132	136	141	137	139	142	147	143	144	148	153	148	150	153	158	155	157	160	165
	1260	MBh	33.5	34.6	35.6	37.1	33.8	34.3	35.3	36.8	33.0	33.5	34.4	35.9	31.5	32.0	33.0	34.5	29.7	30.2	31.1	32.6	28.0	28.5	29.5	28.9
		S/T	1.00	0.93	0.80	0.66	1.00	0.94	0.81	0.67	1.00	1.00	0.83	0.69	1.00	1.00	0.85	0.71	1.00	1.00	0.87	0.73	1.00	1.00	1.00	0.84
		ΔT	29	23	20	17	24	23	20	17	24	23	20	17	24	23	20	17	24	22	20	17	25	23	21	21
		kW	2.23	2.33	2.32	2.34	2.63	2.62	2.62	2.64	2.96	2.96	2.95	2.97	3.32	3.32	3.31	3.33	3.72	3.72	3.71	3.74	4.19	4.19	4.19	3.71
		Amps	8.2	8.5	8.4	8.5	9.8	9.7	9.7	9.8	11.2	11.2	11.2	11.3	12.8	12.8	12.7	12.8	14.5	14.5	14.5	14.6	16.6	16.6	16.5	14.7
		Hi PR	273	277	279	284	319	320	322	327	364	365	367	371	412	413	415	420	464	465	467	472	520	521	523	517
		Lo PR	125	127	130	135	133	135	138	143	140	141	144	149	145	147	150	155	150	152	155	160	157	159	162	167
	1450	MBh	34.8	35.2	36.2	37.7	34.5	35.0	35.9	37.4	33.6	34.1	35.1	36.6	32.1	32.6	33.6	35.1	30.3	30.8	31.8	33.3	28.7	29.1	30.1	29.4
		S/T	1.00	0.97	0.84	0.70	1.00	1.00	0.84	0.70	1.00	1.00	0.87	0.73	1.00	1.00	0.89	0.75	1.00	1.00	0.91	0.77	1.00	1.00	1.00	0.88
		ΔT	23	22	19	16	23	22	19	16	23	22	19	16	23	22	19	16	23	21	19	16	24	22	20	20
		kW	2.34	2.34	2.34	2.36	2.64	2.64	2.63	2.66	2.97	2.97	2.97	2.99	3.33	3.33	3.33	3.35	3.74	3.73	3.73	3.75	4.21	4.21	4.20	3.72
		Amps	8.5	8.5	8.5	8.6	9.8	9.8	9.8	9.9	11.3	11.3	11.2	11.3	12.8	12.8	12.8	12.9	14.6	14.6	14.6	14.7	16.6	16.6	16.6	14.8
		Hi PR	279	280	282	286	321	323	325	329	366	368	369	374	415	416	418	423	467	468	470	475	522	524	526	520
		Lo PR	128	130	133	138	136	137	140	145	142	144	147	152	147	149	152	157	153	154	157	163	160	161	164	169

IDB = Entering Indoor Dry Bulb Temperature

Shaded area is AHRI conditions

kW = Total system power

High and low pressures are measured at the liquid and suction service valves.

Amps = outdoor unit amps (comp.+fan)

Airflow may vary depending on actual ambient conditions and system operation modes.

Expanded Cooling Data — DX6VSS1810A*/CAPEA1818*4A* + DTA119A71

			Outdoor Ambient Temperature																							
			65°F				75°F				85°F				95°F				105°F				115°F			
			Entering Indoor Wet Bulb Temperature																							
IDB	Airflow		59	63	67	71	59	63	67	71	59	63	67	71	59	63	67	71	59	63	67	71	59	63	67	71
70	520	MBh	16.6	16.9	17.4		16.5	16.7	17.2		16.1	16.3	16.8		15.3	15.6	16.0		14.4	14.6	15.1		13.6	13.8	14.3	
		S/T	0.62	0.54	0.40		0.62	0.54	0.40		0.65	0.57	0.43		1.00	0.59	0.45		1.00	0.61	0.47		1.00	0.67	0.52	
		ΔT	18	16	13		18	16	13		18	16	13		18	16	13		18	16	13		19	17	14	
		kW	1.06	1.06	1.05		1.19	1.19	1.19		1.34	1.34	1.33		1.50	1.50	1.49		1.68	1.68	1.67		1.89	1.89	1.88	
		Amps	3.8	3.8	3.8		4.4	4.4	4.4		5.0	5.0	5.0		5.7	5.7	5.7		6.5	6.5	6.5		7.4	7.4	7.4	
		Hi PR	242	243	245		280	281	283		320	322	323		364	365	366		410	411	413		460	461	463	
		Lo PR	126	127	130		133	135	138		140	142	145		146	147	151		151	153	156		158	160	163	
	610	MBh	16.9	17.1	17.6		16.8	17.0	17.5		16.3	16.6	17.1		15.6	15.8	16.3		14.7	14.9	15.4		13.8	14.1	14.6	
		S/T	0.69	0.61	0.47		0.70	0.62	0.48		0.73	0.65	0.51		1.00	0.67	0.53		1.00	0.69	0.55		1.00	0.74	0.60	
		ΔT	17	15	12		17	15	12		17	15	12		17	15	12		16	15	12		17	16	13	
		kW	1.07	1.06	1.06		1.20	1.20	1.19		1.35	1.35	1.34		1.51	1.51	1.50		1.69	1.68	1.68		1.90	1.89	1.89	
		Amps	3.9	3.8	3.8		4.4	4.4	4.4		5.1	5.1	5.1		5.8	5.8	5.8		6.5	6.5	6.5		7.5	7.5	7.4	
		Hi PR	245	246	247		283	284	286		323	324	326		366	367	369		413	414	415		462	463	465	
		Lo PR	128	129	133		136	137	140		142	144	147		148	149	153		153	155	158		160	162	165	
	700	MBh	17.2	17.5	18.0		17.1	17.3	17.8		16.6	16.9	17.4		15.9	16.1	16.6		15.0	15.2	15.7		14.1	14.4	14.9	
		S/T	0.73	0.65	0.51		0.74	0.66	0.52		1.00	0.69	0.54		1.00	0.71	0.56		1.00	0.73	0.59		1.00	1.00	0.64	
		ΔT	16	14	11		16	14	11		16	14	11		16	14	11		15	14	11		16	15	12	
		kW	1.07	1.07	1.07		1.20	1.20	1.20		1.35	1.35	1.35		1.51	1.51	1.51		1.69	1.69	1.69		1.90	1.90	1.90	
		Amps	3.9	3.9	3.9		4.5	4.5	4.4		5.1	5.1	5.1		5.8	5.8	5.8		6.6	6.6	6.6		7.5	7.5	7.5	
		Hi PR	247	248	250		285	286	288		325	326	328		368	369	371		415	416	418		465	466	467	
		Lo PR	130	132	135		138	140	143		145	146	149		150	152	155		156	158	161		163	164	168	
75	520	MBh	16.7	16.9	17.4	18.2	16.5	16.7	17.2	18.0	16.1	16.3	16.8	17.6	15.3	15.6	16.1	16.8	14.4	14.6	15.1	15.9	13.6	13.8	14.3	15.1
		S/T	0.75	0.67	0.53	0.38	1.00	0.68	0.54	0.39	1.00	0.70	0.56	0.41	1.00	0.72	0.58	0.43	1.00	0.75	0.61	0.46	1.00	1.00	0.66	0.51
		ΔT	21	20	17	14	21	20	17	14	22	20	17	14	21	20	17	14	21	19	16	13	22	21	17	14
		kW	1.06	1.06	1.05	1.06	1.19	1.19	1.19	1.20	1.34	1.34	1.33	1.34	1.50	1.50	1.49	1.50	1.68	1.68	1.67	1.68	1.89	1.89	1.88	1.89
		Amps	3.8	3.8	3.8	3.8	4.4	4.4	4.4	4.4	5.0	5.0	5.0	5.1	5.7	5.7	5.7	5.8	6.5	6.5	6.5	6.5	7.4	7.4	7.4	7.5
		Hi PR	242	243	245	249	281	282	283	288	321	322	323	328	364	365	367	371	410	411	413	417	460	461	463	467
		Lo PR	126	127	130	136	133	135	138	144	140	142	145	150	146	147	151	156	151	153	156	161	158	160	163	168
	610	MBh	16.9	17.1	17.6	18.4	16.8	17.0	17.5	18.3	16.3	16.6	17.1	17.8	15.6	**15.8**	16.3	17.1	14.7	14.9	15.4	16.2	13.8	14.1	14.6	15.3
		S/T	0.83	0.75	0.61	0.46	1.00	0.75	0.61	0.46	1.00	0.78	0.64	0.49	1.00	**0.80**	0.66	0.51	1.00	1.00	0.68	0.53	1.00	1.00	0.74	0.59
		ΔT	20	19	16	12	20	19	15	12	20	19	16	13	20	**19**	15	12	20	18	15	12	21	19	16	13
		kW	1.06	1.06	1.06	1.07	1.20	1.20	1.19	1.20	1.35	1.34	1.34	1.35	1.51	**1.50**	1.50	1.51	1.68	1.68	1.68	1.69	1.89	1.89	1.89	1.90
		Amps	3.9	3.8	3.8	3.9	4.4	4.4	4.4	4.5	5.1	5.1	5.1	5.1	5.8	**5.8**	5.8	5.8	6.5	6.5	6.5	6.6	7.5	7.5	7.4	7.5
		Hi PR	245	246	248	252	283	284	286	290	323	324	326	330	366	**367**	369	373	413	414	416	420	463	464	465	469
		Lo PR	128	129	133	138	136	137	140	146	142	144	147	152	148	**150**	153	158	154	155	158	164	161	162	165	171
	700	MBh	17.2	17.5	18.0	18.7	17.1	17.3	17.8	18.6	16.6	16.9	17.4	18.1	15.9	16.1	16.6	17.4	15.0	15.2	15.7	16.5	14.1	14.4	14.9	15.6
		S/T	0.87	0.79	0.65	0.50	1.00	0.79	0.65	0.50	1.00	0.82	0.68	0.53	1.00	0.84	0.70	0.55	1.00	1.00	0.72	0.57	1.00	1.00	0.78	0.63
		ΔT	19	18	15	11	19	18	15	11	19	18	15	12	19	18	15	11	19	17	14	11	20	18	15	12
		kW	1.07	1.07	1.07	1.08	1.20	1.20	1.20	1.21	1.35	1.35	1.35	1.36	1.51	1.51	1.51	1.52	1.69	1.69	1.69	1.70	1.90	1.90	1.90	1.91
		Amps	3.9	3.9	3.9	3.9	4.5	4.5	4.4	4.5	5.1	5.1	5.1	5.1	5.8	5.8	5.8	5.8	6.6	6.6	6.6	6.6	7.5	7.5	7.5	7.5
		Hi PR	247	248	250	254	285	286	288	292	325	327	328	332	369	370	371	376	415	416	418	422	465	466	468	472
		Lo PR	130	132	135	140	138	140	143	148	145	146	149	155	150	152	155	161	156	158	161	166	163	165	168	173

IDB = Entering Indoor Dry Bulb Temperature

Shaded area is ACCA (TVA) conditions

kW = Total system power

High and low pressures are measured at the liquid and suction service valves.

Amps = outdoor unit amps (comp.+fan)

Airflow may vary depending on actual ambient conditions and system operation modes.

Expanded Cooling Data — DX6VSS1810A* / CAPEA1818*4A* + DTA119A71 (cont.)

			Outdoor Ambient Temperature																							
			65°F				75°F				85°F				95°F				105°F				115°F			
			Entering Indoor Wet Bulb Temperature																							
IDB	Airflow		59	63	67	71	59	63	67	71	59	63	67	71	59	63	67	71	59	63	67	71	59	63	67	71
80	520	MBh	16.7	17.0	17.5	18.2	16.6	16.8	17.3	18.1	16.2	16.4	16.9	17.7	15.4	15.6	16.1	16.9	14.5	14.7	15.2	16.0	13.7	13.9	14.4	15.2
		S/T	1.00	0.80	0.66	0.51	1.00	0.81	0.67	0.52	1.00	0.83	0.69	0.54	1.00	1.00	0.71	0.56	1.00	1.00	0.74	0.59	1.00	1.00	0.79	0.64
		ΔT	25	23	20	17	25	23	20	17	25	24	21	17	25	23	20	17	25	23	20	17	26	24	21	18
		kW	1.06	1.06	1.05	1.06	1.19	1.19	1.19	1.20	1.34	1.34	1.33	1.34	1.50	1.50	1.49	1.50	1.68	1.68	1.67	1.68	1.89	1.89	1.88	1.89
		Amps	3.8	3.8	3.8	3.8	4.4	4.4	4.4	4.4	5.0	5.0	5.0	5.1	5.7	5.7	5.7	5.8	6.5	6.5	6.5	6.5	7.4	7.4	7.4	7.5
		Hi PR	243	244	246	250	281	282	284	288	321	322	324	328	364	365	367	371	411	412	414	418	461	462	463	467
		Lo PR	126	128	131	136	134	136	139	144	141	142	145	151	146	148	151	156	152	153	157	162	159	160	164	169
	610	MBh	17.0	17.2	17.7	18.5	16.9	17.1	17.6	18.3	16.4	16.7	17.1	17.9	15.7	15.9	**16.4**	17.2	14.7	15.0	15.5	16.2	13.9	14.1	14.6	15.4
		S/T	1.00	0.88	0.74	0.59	1.00	0.89	0.74	0.60	1.00	0.91	0.77	0.62	1.00	1.00	**0.79**	0.64	1.00	1.00	0.81	0.66	1.00	1.00	0.87	0.72
		ΔT	24	22	19	16	24	22	19	16	24	22	19	16	24	22	**19**	16	24	22	19	16	25	23	20	17
		kW	1.07	1.06	1.06	1.07	1.20	1.20	1.19	1.20	1.35	1.34	1.34	1.35	1.51	1.51	**1.50**	1.51	1.69	1.68	1.68	1.69	1.90	1.89	1.89	1.90
		Amps	3.9	3.8	3.8	3.9	4.4	4.4	4.4	4.5	5.1	5.1	5.1	5.1	5.8	5.8	**5.8**	5.8	6.5	6.5	6.5	6.6	7.5	7.5	7.4	7.5
		Hi PR	245	246	248	252	283	285	286	290	324	325	326	331	367	368	**369**	374	413	414	416	420	463	464	466	470
		Lo PR	128	130	133	139	136	138	141	146	143	144	148	153	149	150	**153**	159	154	156	159	164	161	163	166	171
	700	MBh	17.3	17.6	18.1	18.8	17.2	17.4	17.9	18.7	16.7	17.0	17.5	18.2	16.0	16.2	16.7	17.5	15.1	15.3	15.8	16.6	14.2	14.5	15.0	15.7
		S/T	1.00	0.92	0.78	0.63	1.00	0.92	0.78	0.63	1.00	1.00	0.81	0.66	1.00	1.00	0.83	0.68	1.00	1.00	0.85	0.70	1.00	1.00	1.00	0.76
		ΔT	23	21	18	15	23	21	18	15	23	21	18	15	23	21	18	15	23	21	18	15	24	22	19	16
		kW	1.07	1.07	1.07	1.08	1.20	1.20	1.20	1.21	1.35	1.35	1.35	1.36	1.51	1.51	1.51	1.52	1.69	1.69	1.69	1.70	1.90	1.90	1.90	1.91
		Amps	3.9	3.9	3.9	3.9	4.5	4.5	4.4	4.5	5.1	5.1	5.1	5.1	5.8	5.8	5.8	5.8	6.6	6.6	6.6	6.6	7.5	7.5	7.5	7.5
		Hi PR	248	249	250	255	286	287	289	293	326	327	329	333	369	370	372	376	416	417	418	423	465	466	468	472
		Lo PR	131	132	136	141	139	140	143	149	145	147	150	155	151	153	156	161	157	158	161	167	164	165	168	174
85	520	MBh	17.0	17.3	17.8	18.5	16.9	17.1	17.6	18.4	16.4	16.7	17.2	17.9	15.7	15.9	16.4	17.2	14.8	15.0	15.5	16.3	13.9	14.2	14.7	15.4
		S/T	1.00	0.91	0.77	0.62	1.00	1.00	0.77	0.62	1.00	1.00	0.80	0.65	1.00	1.00	0.82	0.67	1.00	1.00	1.00	0.69	1.00	1.00	1.00	0.75
		ΔT	28	27	24	20	28	27	23	20	28	27	24	21	28	27	23	20	28	26	23	20	29	27	24	21
		kW	1.06	1.06	1.06	1.07	1.19	1.19	1.19	1.20	1.34	1.34	1.34	1.35	1.50	1.50	1.50	1.51	1.68	1.68	1.68	1.69	1.89	1.89	1.89	1.90
		Amps	3.8	3.8	3.8	3.9	4.4	4.4	4.4	4.4	5.0	5.0	5.0	5.1	5.7	5.7	5.7	5.8	6.5	6.5	6.5	6.6	7.4	7.4	7.4	7.5
		Hi PR	244	245	247	251	282	283	285	289	322	323	325	329	365	366	368	372	412	413	415	419	462	463	464	469
		Lo PR	128	130	133	138	136	137	141	146	143	144	147	153	148	150	153	158	154	155	159	164	161	162	166	171
	610	MBh	17.3	17.5	18.0	18.8	17.1	17.4	17.9	18.6	16.7	16.9	17.4	18.2	15.9	16.2	16.7	17.4	15.0	15.3	15.8	16.5	14.2	14.4	14.9	15.7
		S/T	1.00	0.98	0.84	0.69	1.00	1.00	0.85	0.70	1.00	1.00	0.88	0.73	1.00	1.00	0.90	0.75	1.00	1.00	1.00	0.77	1.00	1.00	1.00	0.82
		ΔT	27	25	22	19	27	25	22	19	27	26	23	19	27	25	22	19	27	25	22	19	28	26	23	20
		kW	1.07	1.07	1.06	1.07	1.20	1.20	1.20	1.21	1.35	1.35	1.35	1.36	1.51	1.51	1.51	1.52	1.69	1.69	1.68	1.69	1.90	1.90	1.89	1.90
		Amps	3.9	3.9	3.9	3.9	4.4	4.4	4.4	4.5	5.1	5.1	5.1	5.1	5.8	5.8	5.8	5.8	6.6	6.6	6.5	6.6	7.5	7.5	7.5	7.5
		Hi PR	246	247	249	253	285	286	287	292	325	326	327	332	368	369	371	375	414	415	417	421	464	465	467	471
		Lo PR	130	132	135	140	138	140	143	148	145	146	149	155	150	152	155	161	156	158	161	166	163	165	168	173
	700	MBh	17.6	17.8	18.3	19.1	17.4	17.7	18.2	18.9	17.0	17.2	17.7	18.5	16.3	16.5	17.0	17.8	15.3	15.6	16.1	16.8	14.5	14.7	15.2	16.0
		S/T	1.00	1.00	0.88	0.73	1.00	1.00	0.89	0.74	1.00	1.00	0.91	0.77	1.00	1.00	0.93	0.79	1.00	1.00	1.00	0.81	1.00	1.00	1.00	0.86
		ΔT	26	24	21	18	26	24	21	18	26	25	22	18	26	24	21	18	26	24	21	18	27	25	22	19
		kW	1.07	1.07	1.07	1.08	1.21	1.21	1.20	1.21	1.36	1.35	1.35	1.36	1.52	1.51	1.51	1.52	1.69	1.69	1.69	1.70	1.90	1.90	1.90	1.91
		Amps	3.9	3.9	3.9	3.9	4.5	4.5	4.5	4.5	5.1	5.1	5.1	5.1	5.8	5.8	5.8	5.8	6.6	6.6	6.6	6.6	7.5	7.5	7.5	7.5
		Hi PR	249	250	251	256	287	288	290	294	327	328	330	334	370	371	373	377	417	418	420	424	466	468	469	473
		Lo PR	133	134	138	143	140	142	145	151	147	149	152	157	153	154	158	163	158	160	163	169	165	167	170	176

IDB = Entering Indoor Dry Bulb Temperature

Shaded area is AHRI conditions

kW = Total system power

High and low pressures are measured at the liquid and suction service valves.

Amps = outdoor unit amps (comp.+fan)

Airflow may vary depending on actual ambient conditions and system operation modes.

Expanded Cooling Data — DX6VSS2410A*/CAPEA1818*4A* + DTA119A71

			Outdoor Ambient Temperature																							
			65°F				75°F				85°F				95°F				105°F				115°F			
			Entering Indoor Wet Bulb Temperature																							
IDB	Airflow		59	63	67	71	59	63	67	71	59	63	67	71	59	63	67	71	59	63	67	71	59	63	67	71
70	680	MBh	22.1	22.4	23.1		21.9	22.2	22.9		21.3	21.7	22.3		20.4	20.7	21.3		19.1	19.4	20.1		18.0	18.3	19.0	
		S/T	0.61	0.53	0.39		0.61	0.53	0.40		0.64	0.56	0.42		0.66	0.58	0.44		1.00	0.60	0.46		1.00	0.66	0.52	
		ΔT	18	16	13		18	16	13		18	16	13		18	16	13		18	16	13		19	17	14	
		kW	1.55	1.55	1.54		1.75	1.75	1.74		1.97	1.97	1.97		2.21	2.21	2.21		2.48	2.48	2.48		2.80	2.80	2.79	
		Amps	5.6	5.6	5.6		6.5	6.4	6.4		7.4	7.4	7.4		8.5	8.5	8.4		9.6	9.6	9.6		11.0	11.0	11.0	
		Hi PR	261	262	264		302	303	305		345	346	348		391	392	394		441	443	444		495	496	498	
		Lo PR	121	123	126		129	130	134		135	137	140		141	142	145		146	148	151		153	155	158	
	800	MBh	22.5	22.8	23.4		22.3	22.6	23.2		21.7	22.0	22.7		20.7	21.0	21.7		19.5	19.8	20.5		18.4	18.7	19.3	
		S/T	0.68	0.61	0.47		0.69	0.61	0.47		0.72	0.64	0.50		0.74	0.66	0.52		1.00	0.68	0.54		1.00	0.73	0.59	
		ΔT	17	15	12		17	15	12		17	15	12		17	15	12		16	15	12		17	16	13	
		kW	1.56	1.56	1.56		1.76	1.76	1.76		1.98	1.98	1.98		2.23	2.22	2.22		2.49	2.49	2.49		2.81	2.81	2.81	
		Amps	5.6	5.6	5.6		6.5	6.5	6.5		7.5	7.5	7.5		8.5	8.5	8.5		9.7	9.7	9.7		11.1	11.1	11.0	
		Hi PR	263	264	266		304	306	307		348	349	351		394	395	397		444	445	447		498	499	501	
		Lo PR	124	125	128		131	133	136		138	139	142		143	145	148		148	150	153		155	157	160	
	920	MBh	22.9	23.2	23.9		22.7	23.0	23.7		22.1	22.4	23.1		21.1	21.4	22.1		19.9	20.2	20.9		18.8	19.1	19.8	
		S/T	0.72	0.64	0.51		0.73	0.65	0.51		0.76	0.68	0.54		1.00	0.70	0.56		1.00	0.72	0.58		1.00	0.77	0.63	
		ΔT	16	14	11		16	14	11		16	14	11		16	14	11		15	14	11		16	15	12	
		kW	1.57	1.57	1.57		1.77	1.77	1.77		1.99	1.99	1.99		2.24	2.23	2.23		2.50	2.50	2.50		2.82	2.82	2.82	
		Amps	5.7	5.7	5.7		6.6	6.5	6.5		7.5	7.5	7.5		8.6	8.6	8.5		9.7	9.7	9.7		11.1	11.1	11.1	
		Hi PR	266	267	269		307	308	310		350	351	353		397	398	400		447	448	450		500	501	503	
		Lo PR	126	128	131		133	135	138		140	141	145		145	147	150		151	152	155		158	159	162	
75	680	MBh	22.1	22.5	23.1	24.1	21.9	22.3	22.9	23.9	21.4	21.7	22.3	23.3	20.4	20.7	21.3	22.4	19.1	19.5	20.1	21.1	18.0	18.3	19.0	20.0
		S/T	0.74	0.66	0.52	0.37	0.75	0.67	0.53	0.38	1.00	0.69	0.55	0.41	1.00	0.71	0.57	0.43	1.00	0.74	0.60	0.45	1.00	0.79	0.65	0.50
		ΔT	21	20	17	14	21	20	17	14	22	20	17	14	21	20	17	13	21	19	16	13	22	20	17	14
		kW	1.55	1.55	1.54	1.56	1.75	1.75	1.74	1.76	1.97	1.97	1.97	1.98	2.21	2.21	2.21	2.22	2.48	2.48	2.48	2.49	2.80	2.79	2.79	2.81
		Amps	5.6	5.6	5.6	5.6	6.4	6.4	6.4	6.5	7.4	7.4	7.4	7.5	8.5	8.5	8.4	8.5	9.6	9.6	9.6	9.7	11.0	11.0	11.0	11.1
		Hi PR	261	262	264	268	302	303	305	309	345	346	348	353	392	393	395	399	442	443	445	449	495	496	498	503
		Lo PR	122	123	126	131	129	130	134	139	135	137	140	145	141	142	146	151	146	148	151	156	153	155	158	163
	800	MBh	22.5	22.8	23.5	24.5	22.3	22.6	23.3	24.3	21.7	22.0	22.7	23.7	20.7	**21.0**	21.7	22.7	19.5	19.8	20.5	21.5	18.4	18.7	19.4	20.4
		S/T	0.82	0.74	0.60	0.45	0.82	0.74	0.61	0.46	1.00	0.77	0.63	0.48	1.00	**0.79**	0.65	0.50	1.00	0.81	0.67	0.53	1.00	1.00	0.73	0.58
		ΔT	20	19	15	12	20	18	15	12	20	19	16	13	20	**18**	15	12	20	18	15	12	21	19	16	13
		kW	1.56	1.56	1.56	1.57	1.76	1.76	1.76	1.77	1.98	1.98	1.98	1.99	2.22	**2.22**	2.22	2.23	2.49	2.49	2.49	2.50	2.81	2.81	2.80	2.82
		Amps	5.6	5.6	5.6	5.7	6.5	6.5	6.5	6.5	7.5	7.5	7.4	7.5	8.5	**8.5**	8.5	8.6	9.7	9.7	9.7	9.7	11.1	11.1	11.0	11.1
		Hi PR	263	265	266	271	305	306	308	312	348	349	351	355	394	**395**	397	402	444	445	447	452	498	499	501	505
		Lo PR	124	125	128	133	131	133	136	141	138	139	142	147	143	**145**	148	153	148	150	153	158	155	157	160	165
	920	MBh	22.9	23.2	23.9	24.9	22.7	23.0	23.7	24.7	22.1	22.4	23.1	24.1	21.1	21.5	22.1	23.1	19.9	20.2	20.9	21.9	18.8	19.1	19.8	20.8
		S/T	0.86	0.78	0.64	0.49	1.00	0.78	0.64	0.50	1.00	0.81	0.67	0.52	1.00	0.83	0.69	0.54	1.00	0.85	0.71	0.57	1.00	1.00	0.77	0.62
		ΔT	19	18	15	11	19	18	14	11	19	18	15	12	19	17	14	11	19	17	14	11	20	18	15	12
		kW	1.57	1.57	1.57	1.58	1.77	1.77	1.77	1.78	1.99	1.99	1.99	2.00	2.23	2.23	2.23	2.24	2.50	2.50	2.50	2.51	2.82	2.82	2.81	2.83
		Amps	5.7	5.7	5.7	5.7	6.5	6.5	6.5	6.6	7.5	7.5	7.5	7.6	8.6	8.6	8.5	8.6	9.7	9.7	9.7	9.8	11.1	11.1	11.1	11.2
		Hi PR	266	267	269	274	307	308	310	315	350	351	353	358	397	398	400	404	447	448	450	454	500	502	503	508
		Lo PR	126	128	131	136	133	135	138	143	140	141	145	150	145	147	150	155	151	152	155	161	158	159	162	167

IDB = Entering Indoor Dry Bulb Temperature

Shaded area is ACCA (TVA) conditions

kW = Total system power

High and low pressures are measured at the liquid and suction service valves.

Amps = outdoor unit amps (comp.+fan)

Airflow may vary depending on actual ambient conditions and system operation modes.

Expanded Cooling Data — DX6VSS2410A* / CAPEA1818*4A* + DTA119A71 (cont.)

			Outdoor Ambient Temperature																							
			65°F				75°F				85°F				95°F				105°F				115°F			
			Entering Indoor Wet Bulb Temperature																							
IDB	Airflow		59	63	67	71	59	63	67	71	59	63	67	71	59	63	67	71	59	63	67	71	59	63	67	71
80	680	MBh	22.3	22.6	23.2	24.2	22.1	22.4	23.0	24.0	21.5	21.8	22.5	23.5	20.5	20.8	21.5	22.5	19.3	19.6	20.2	21.3	18.2	18.5	19.1	20.1
		S/T	0.87	0.79	0.65	0.50	1.00	0.80	0.66	0.51	1.00	0.82	0.68	0.54	1.00	0.84	0.70	0.56	1.00	1.00	0.73	0.58	1.00	1.00	0.78	0.63
		ΔT	25	23	20	17	25	23	20	17	25	24	20	17	25	23	20	17	25	23	20	17	26	24	21	18
		kW	1.55	1.55	1.54	1.56	1.75	1.75	1.74	1.76	1.97	1.97	1.97	1.98	2.21	2.21	2.21	2.22	2.48	2.48	2.48	2.49	2.80	2.80	2.79	2.81
		Amps	5.6	5.6	5.6	5.6	6.5	6.4	6.4	6.5	7.4	7.4	7.4	7.5	8.5	8.5	8.4	8.5	9.6	9.6	9.6	9.7	11.0	11.0	11.0	11.1
		Hi PR	261	262	264	269	302	304	305	310	346	347	349	353	392	393	395	400	442	443	445	450	496	497	499	503
		Lo PR	122	124	127	132	129	131	134	139	136	137	141	146	141	143	146	151	147	148	151	157	154	155	158	163
	800	MBh	22.6	22.9	23.6	24.6	22.4	22.7	23.4	24.4	21.8	22.1	22.8	23.8	20.8	21.1	**21.8**	22.8	19.6	19.9	20.6	21.6	18.5	18.8	19.5	20.5
		S/T	1.00	0.87	0.73	0.58	1.00	0.87	0.73	0.59	1.00	0.90	0.76	0.61	1.00	0.92	**0.78**	0.63	1.00	1.00	0.80	0.66	1.00	1.00	0.86	0.71
		ΔT	24	22	19	16	24	22	19	16	24	22	19	16	24	22	**19**	16	23	22	19	16	24	23	20	17
		kW	1.56	1.56	1.56	1.57	1.76	1.76	1.76	1.77	1.98	1.98	1.98	1.99	2.22	2.22	**2.22**	2.24	2.49	2.49	2.49	2.50	2.81	2.81	2.81	2.82
		Amps	5.6	5.6	5.6	5.7	6.5	6.5	6.5	6.6	7.5	7.5	7.5	7.5	8.5	8.5	**8.5**	8.6	9.7	9.7	9.7	9.7	11.1	11.1	11.0	11.1
		Hi PR	264	265	267	271	305	306	308	313	348	349	351	356	395	396	**398**	402	445	446	448	452	498	499	501	506
		Lo PR	124	126	129	134	132	133	136	141	138	140	143	148	144	145	**148**	153	149	150	154	159	156	157	160	166
	920	MBh	23.0	23.3	24.0	25.0	22.8	23.1	23.8	24.8	22.2	22.6	23.2	24.2	21.3	21.6	22.2	23.2	20.0	20.3	21.0	22.0	18.9	19.2	19.9	20.9
		S/T	1.00	0.91	0.77	0.62	1.00	0.91	0.77	0.63	1.00	0.94	0.80	0.65	1.00	1.00	0.82	0.67	1.00	1.00	0.84	0.70	1.00	1.00	0.89	0.75
		ΔT	23	21	18	15	23	21	18	15	23	21	18	15	23	21	18	15	22	21	18	15	24	22	19	16
		kW	1.57	1.57	1.57	1.58	1.77	1.77	1.77	1.78	1.99	1.99	1.99	2.00	2.24	2.23	2.23	2.25	2.50	2.50	2.50	2.51	2.82	2.82	2.82	2.83
		Amps	5.7	5.7	5.7	5.7	6.6	6.5	6.5	6.6	7.5	7.5	7.5	7.6	8.6	8.6	8.5	8.6	9.7	9.7	9.7	9.8	11.1	11.1	11.1	11.2
		Hi PR	267	268	269	274	308	309	311	315	351	352	354	358	397	398	400	405	447	449	450	455	501	502	504	508
		Lo PR	127	128	131	136	134	136	139	144	141	142	145	150	146	148	151	156	151	153	156	161	158	160	163	168
85	680	MBh	22.6	22.9	23.6	24.6	22.4	22.7	23.4	24.4	21.9	22.2	22.8	23.8	20.9	21.2	21.8	22.8	19.6	19.9	20.6	21.6	18.5	18.8	19.5	20.5
		S/T	1.00	0.89	0.75	0.61	1.00	0.90	0.76	0.61	1.00	1.00	0.79	0.64	1.00	1.00	0.81	0.66	1.00	1.00	0.83	0.68	1.00	1.00	1.00	0.74
		ΔT	28	27	23	20	28	26	23	20	28	27	24	21	28	26	23	20	28	26	23	20	29	27	24	21
		kW	1.55	1.55	1.55	1.56	1.75	1.75	1.75	1.76	1.98	1.97	1.97	1.99	2.22	2.21	2.21	2.23	2.49	2.48	2.48	2.50	2.80	2.80	2.80	2.81
		Amps	5.6	5.6	5.6	5.6	6.5	6.5	6.4	6.5	7.4	7.4	7.4	7.5	8.5	8.5	8.5	8.5	9.7	9.6	9.6	9.7	11.0	11.0	11.0	11.1
		Hi PR	262	264	265	270	304	305	307	311	347	348	350	354	393	394	396	401	443	444	446	451	497	498	500	504
		Lo PR	124	125	128	134	131	133	136	141	138	139	142	148	143	145	148	153	149	150	153	158	155	157	160	165
	800	MBh	23.0	23.3	23.9	25.0	22.8	23.1	23.7	24.8	22.2	22.5	23.2	24.2	21.2	21.5	22.2	23.2	20.0	20.3	21.0	22.0	18.9	19.2	19.8	20.9
		S/T	1.00	0.97	0.83	0.69	1.00	0.98	0.84	0.69	1.00	1.00	0.86	0.72	1.00	1.00	0.88	0.74	1.00	1.00	0.91	0.76	1.00	1.00	1.00	0.81
		ΔT	27	25	22	19	27	25	22	19	27	25	22	19	27	25	22	19	27	25	22	19	28	26	23	20
		kW	1.57	1.56	1.56	1.58	1.77	1.76	1.76	1.78	1.99	1.99	1.98	2.00	2.23	2.23	2.22	2.24	2.50	2.50	2.49	2.51	2.81	2.81	2.81	2.82
		Amps	5.7	5.6	5.6	5.7	6.5	6.5	6.5	6.6	7.5	7.5	7.5	7.5	8.5	8.5	8.5	8.6	9.7	9.7	9.7	9.8	11.1	11.1	11.1	11.1
		Hi PR	265	266	268	273	306	307	309	314	349	351	352	357	396	397	399	403	446	447	449	454	500	501	502	507
		Lo PR	126	128	131	136	133	135	138	143	140	141	145	150	145	147	150	155	151	152	155	161	158	159	162	167
	920	MBh	23.4	23.7	24.4	25.4	23.2	23.5	24.2	25.2	22.6	22.9	23.6	24.6	21.6	21.9	22.6	23.6	20.4	20.7	21.4	22.4	19.3	19.6	20.3	21.3
		S/T	1.00	1.00	0.87	0.72	1.00	1.00	0.88	0.73	1.00	1.00	0.90	0.76	1.00	1.00	0.92	0.78	1.00	1.00	0.95	0.80	1.00	1.00	1.00	0.85
		ΔT	26	24	21	18	26	24	21	18	26	25	21	18	26	24	21	18	26	24	21	18	27	25	22	19
		kW	1.58	1.57	1.57	1.59	1.78	1.77	1.77	1.79	2.00	2.00	1.99	2.01	2.24	2.24	2.23	2.25	2.51	2.51	2.50	2.52	2.82	2.82	2.82	2.83
		Amps	5.7	5.7	5.7	5.7	6.6	6.6	6.5	6.6	7.5	7.5	7.5	7.6	8.6	8.6	8.6	8.6	9.8	9.7	9.7	9.8	11.1	11.1	11.1	11.2
		Hi PR	268	269	271	275	309	310	312	316	352	353	355	360	399	400	402	406	449	450	452	456	502	503	505	510
		Lo PR	128	130	133	138	136	137	140	146	142	144	147	152	148	149	152	158	153	155	158	163	160	161	165	170

IDB = Entering Indoor Dry Bulb Temperature

Shaded area is AHRI conditions

kW = Total system power

High and low pressures are measured at the liquid and suction service valves.

Amps = outdoor unit amps (comp.+fan)

Airflow may vary depending on actual ambient conditions and system operation modes.

Expanded Cooling Data — DX6VSS3010A*/CAPEA2422*4A* + DTA119A71

			Outdoor Ambient Temperature																							
			65°F				75°F				85°F				95°F				105°F				115°F			
			Entering Indoor Wet Bulb Temperature																							
IDB	Airflow		59	63	67	71	59	63	67	71	59	63	67	71	59	63	67	71	59	63	67	71	59	63	67	71
70	750	MBh	26.8	27.2	28.0		26.6	26.9	27.7		25.9	26.2	27.0		24.7	25.0	25.8		23.2	23.6	24.4		21.8	22.2	23.0	
		S/T	0.58	0.51	0.38		0.59	0.52	0.38		0.62	0.54	0.41		1.00	0.56	0.43		1.00	0.58	0.45		1.00	0.63	0.50	
		ΔT	18	16	13		18	16	13		18	16	13		18	16	13		18	16	13		19	17	14	
		kW	1.96	1.96	1.95		2.21	2.21	2.20		2.49	2.49	2.48		2.79	2.79	2.79		3.13	3.13	3.12		3.53	3.52	3.52	
		Amps	7.1	7.1	7.1		8.2	8.2	8.2		9.4	9.4	9.4		10.7	10.7	10.7		12.2	12.2	12.1		13.9	13.9	13.9	
		Hi PR	272	273	275		315	316	318		360	361	363		408	409	411		460	462	464		516	517	519	
		Lo PR	125	126	130		132	134	137		139	141	144		145	146	150		150	152	155		157	159	162	
	880	MBh	27.2	27.6	28.4		27.0	27.4	28.2		26.3	26.6	27.5		25.1	25.4	26.2		23.6	24.0	24.8		22.2	22.6	23.4	
		S/T	0.66	0.58	0.45		0.66	0.59	0.45		0.69	0.61	0.48		1.00	0.63	0.50		1.00	0.65	0.52		1.00	0.71	0.57	
		ΔT	17	15	12		17	15	12		17	15	12		17	15	12		16	15	12		17	16	13	
		kW	1.98	1.97	1.97		2.23	2.22	2.22		2.51	2.50	2.50		2.81	2.81	2.80		3.15	3.14	3.14		3.54	3.54	3.54	
		Amps	7.2	7.2	7.1		8.2	8.2	8.2		9.5	9.5	9.4		10.8	10.8	10.7		12.2	12.2	12.2		14.0	14.0	13.9	
		Hi PR	275	276	278		318	319	321		363	364	366		411	412	414		463	464	466		519	520	522	
		Lo PR	127	129	132		135	136	139		141	143	146		147	148	152		152	154	157		159	161	164	
	1010	MBh	27.7	28.1	28.9		27.5	27.9	28.7		26.8	27.2	28.0		25.6	26.0	26.8		24.1	24.5	25.3		22.8	23.1	23.9	
		S/T	0.69	0.62	0.49		0.70	0.63	0.49		1.00	0.65	0.52		1.00	0.67	0.54		1.00	0.69	0.56		1.00	0.74	0.61	
		ΔT	16	14	11		16	14	11		16	14	11		16	14	11		15	14	11		16	15	12	
		kW	1.99	1.99	1.98		2.24	2.24	2.23		2.52	2.52	2.51		2.82	2.82	2.81		3.16	3.16	3.15		3.55	3.55	3.55	
		Amps	7.2	7.2	7.2		8.3	8.3	8.3		9.5	9.5	9.5		10.8	10.8	10.8		12.3	12.3	12.3		14.0	14.0	14.0	
		Hi PR	277	278	280		320	321	323		365	366	368		414	415	417		466	467	469		522	523	525	
		Lo PR	129	131	134		137	139	142		144	145	148		149	151	154		155	156	160		162	163	167	
75	750	MBh	26.8	27.2	28.0	29.2	26.6	27.0	27.8	29.0	25.9	26.3	27.1	28.3	24.7	25.0	25.9	27.1	23.2	23.6	24.4	25.6	21.8	22.2	23.0	24.3
		S/T	0.71	0.64	0.50	0.36	0.72	0.64	0.51	0.37	1.00	0.67	0.53	0.39	1.00	0.69	0.55	0.41	1.00	0.71	0.57	0.43	1.00	1.00	0.63	0.48
		ΔT	21	20	17	14	21	20	17	14	22	20	17	14	21	20	17	14	21	19	16	13	22	21	17	14
		kW	1.96	1.96	1.95	1.97	2.21	2.21	2.20	2.22	2.49	2.49	2.48	2.50	2.79	2.79	2.78	2.80	3.13	3.13	3.12	3.14	3.52	3.52	3.52	3.54
		Amps	7.1	7.1	7.1	7.1	8.2	8.2	8.1	8.2	9.4	9.4	9.4	9.4	10.7	10.7	10.7	10.8	12.2	12.2	12.1	12.2	13.9	13.9	13.9	13.9
		Hi PR	272	273	275	280	315	316	318	323	360	361	363	368	408	410	412	416	461	462	464	469	516	518	520	524
		Lo PR	125	126	130	135	133	134	137	143	139	141	144	149	145	146	150	155	150	152	155	160	157	159	162	167
	880	MBh	27.2	27.6	28.4	29.6	27.0	27.4	28.2	29.4	26.3	26.7	27.5	28.7	25.1	**25.5**	26.3	27.5	23.6	24.0	24.8	26.0	22.3	22.6	23.4	24.7
		S/T	0.79	0.71	0.58	0.44	1.00	0.72	0.58	0.44	1.00	0.74	0.61	0.47	1.00	**0.76**	0.63	0.49	1.00	0.78	0.65	0.51	1.00	1.00	0.70	0.56
		ΔT	20	19	16	12	20	19	15	12	20	19	16	13	20	**19**	15	12	20	18	15	12	21	19	16	13
		kW	1.98	1.97	1.97	1.99	2.23	2.22	2.22	2.24	2.50	2.50	2.50	2.52	2.81	**2.80**	2.80	2.82	3.14	3.14	3.14	3.16	3.54	3.54	3.53	3.55
		Amps	7.2	7.1	7.1	7.2	8.2	8.2	8.2	8.3	9.5	9.4	9.4	9.5	10.8	**10.8**	10.7	10.8	12.2	12.2	12.2	12.3	14.0	13.9	13.9	14.0
		Hi PR	275	276	278	283	318	319	321	326	363	364	366	371	411	**412**	414	419	463	465	467	471	519	520	522	527
		Lo PR	127	129	132	137	135	136	139	145	141	143	146	151	147	**149**	152	157	153	154	157	163	159	161	164	170
	1010	MBh	27.7	28.1	28.9	30.1	27.5	27.9	28.7	29.9	26.8	27.2	28.0	29.2	25.6	26.0	26.8	28.0	24.1	24.5	25.3	26.5	22.8	23.1	23.9	25.2
		S/T	0.82	0.75	0.61	0.47	1.00	0.75	0.62	0.48	1.00	0.78	0.64	0.50	1.00	0.80	0.66	0.52	1.00	1.00	0.69	0.54	1.00	1.00	0.74	0.59
		ΔT	19	18	15	11	19	18	15	11	19	18	15	12	19	18	15	11	19	17	14	11	20	18	15	12
		kW	1.99	1.99	1.98	2.00	2.24	2.24	2.23	2.25	2.52	2.52	2.51	2.53	2.82	2.82	2.81	2.83	3.16	3.15	3.15	3.17	3.55	3.55	3.55	3.57
		Amps	7.2	7.2	7.2	7.3	8.3	8.3	8.3	8.4	9.5	9.5	9.5	9.6	10.8	10.8	10.8	10.9	12.3	12.3	12.3	12.3	14.0	14.0	14.0	14.1
		Hi PR	277	279	281	285	320	322	323	328	365	367	368	373	414	415	417	422	466	467	469	474	522	523	525	530
		Lo PR	129	131	134	140	137	139	142	147	144	145	149	154	149	151	154	159	155	156	160	165	162	163	167	172

IDB = Entering Indoor Dry Bulb Temperature

Shaded area is ACCA (TVA) conditions

kW = Total system power

High and low pressures are measured at the liquid and suction service valves.

Amps = outdoor unit amps (comp.+fan)

Airflow may vary depending on actual ambient conditions and system operation modes.

Expanded Cooling Data — DX6VSS3010A* / CAPEA2422*4A* + DTA119A71 (cont.)

			Outdoor Ambient Temperature																							
			65°F				75°F				85°F				95°F				105°F				115°F			
			Entering Indoor Wet Bulb Temperature																							
IDB	Airflow		59	63	67	71	59	63	67	71	59	63	67	71	59	63	67	71	59	63	67	71	59	63	67	71
80	750	MBh	27.0	27.3	28.1	29.4	26.7	27.1	27.9	29.1	26.0	26.4	27.2	28.4	24.8	25.2	26.0	27.2	23.3	23.7	24.5	25.7	22.0	22.4	23.2	24.4
		S/T	1.00	0.76	0.63	0.49	1.00	0.77	0.63	0.49	1.00	0.79	0.66	0.52	1.00	1.00	0.68	0.54	1.00	1.00	0.70	0.56	1.00	1.00	0.75	0.61
		ΔT	25	23	20	17	25	23	20	17	25	24	21	17	25	23	20	17	25	23	20	17	26	24	21	18
		kW	1.96	1.96	1.95	1.97	2.21	2.21	2.20	2.22	2.49	2.49	2.48	2.50	2.79	2.79	2.79	2.80	3.13	3.13	3.12	3.14	3.53	3.52	3.52	3.54
		Amps	7.1	7.1	7.1	7.1	8.2	8.2	8.2	8.2	9.4	9.4	9.4	9.4	10.7	10.7	10.7	10.8	12.2	12.2	12.1	12.2	13.9	13.9	13.9	14.0
		Hi PR	273	274	276	280	315	317	319	323	360	362	364	368	409	410	412	417	461	462	464	469	517	518	520	525
		Lo PR	125	127	130	136	133	135	138	143	140	141	144	150	145	147	150	155	151	152	156	161	158	159	163	168
	880	MBh	27.4	27.7	28.5	29.8	27.1	27.5	28.3	29.5	26.4	26.8	27.6	28.8	25.2	25.6	**26.4**	27.6	23.7	24.1	24.9	26.2	22.4	22.8	23.6	24.8
		S/T	1.00	0.83	0.70	0.56	1.00	0.84	0.71	0.57	1.00	0.86	0.73	0.59	1.00	1.00	**0.75**	0.61	1.00	1.00	0.77	0.63	1.00	1.00	0.82	0.68
		ΔT	24	22	19	16	24	22	19	16	24	22	19	16	24	22	**19**	16	24	22	19	16	25	23	20	17
		kW	1.98	1.97	1.97	1.99	2.23	2.22	2.22	2.24	2.51	2.50	2.50	2.52	2.81	2.81	**2.80**	2.82	3.15	3.14	3.14	3.16	3.54	3.54	3.54	3.55
		Amps	7.2	7.1	7.1	7.2	8.2	8.2	8.2	8.3	9.5	9.5	9.4	9.5	10.8	10.8	**10.7**	10.8	12.2	12.2	12.2	12.3	14.0	14.0	13.9	14.0
		Hi PR	275	276	278	283	318	319	321	326	363	364	366	371	412	413	**415**	420	464	465	467	472	520	521	523	528
		Lo PR	128	129	132	138	135	137	140	145	142	143	147	152	148	149	**152**	158	153	155	158	163	160	162	165	170
	1010	MBh	27.9	28.3	29.1	30.3	27.6	28.0	28.8	30.0	26.9	27.3	28.1	29.3	25.7	26.1	26.9	28.1	24.3	24.6	25.4	26.7	22.9	23.3	24.1	25.3
		S/T	1.00	0.87	0.74	0.60	1.00	0.88	0.74	0.60	1.00	1.00	0.77	0.63	1.00	1.00	0.79	0.65	1.00	1.00	0.81	0.67	1.00	1.00	1.00	0.72
		ΔT	23	21	18	15	23	21	18	15	23	21	18	15	23	21	18	15	23	21	18	15	24	22	19	16
		kW	1.99	1.99	1.98	2.00	2.24	2.24	2.23	2.25	2.52	2.52	2.51	2.53	2.82	2.82	2.81	2.83	3.16	3.16	3.15	3.17	3.55	3.55	3.55	3.57
		Amps	7.2	7.2	7.2	7.3	8.3	8.3	8.3	8.4	9.5	9.5	9.5	9.6	10.8	10.8	10.8	10.9	12.3	12.3	12.3	12.4	14.0	14.0	14.0	14.1
		Hi PR	278	279	281	286	321	322	324	329	366	367	369	374	414	416	417	422	467	468	470	474	522	524	525	530
		Lo PR	130	132	135	140	138	139	142	148	144	146	149	154	150	152	155	160	155	157	160	166	162	164	167	172
85	750	MBh	27.4	27.8	28.6	29.8	27.2	27.5	28.3	29.6	26.5	26.8	27.6	28.9	25.3	25.6	26.4	27.7	23.8	24.2	25.0	26.2	22.4	22.8	23.6	24.8
		S/T	1.00	0.86	0.73	0.59	1.00	1.00	0.73	0.59	1.00	1.00	0.76	0.62	1.00	1.00	0.78	0.64	1.00	1.00	0.80	0.66	1.00	1.00	1.00	0.71
		ΔT	28	27	24	20	28	27	23	20	28	27	24	21	28	27	23	20	28	26	23	20	29	27	24	21
		kW	1.97	1.96	1.96	1.98	2.22	2.21	2.21	2.23	2.49	2.49	2.49	2.51	2.80	2.79	2.79	2.81	3.13	3.13	3.13	3.15	3.53	3.53	3.52	3.54
		Amps	7.1	7.1	7.1	7.2	8.2	8.2	8.2	8.3	9.4	9.4	9.4	9.5	10.7	10.7	10.7	10.8	12.2	12.2	12.2	12.2	13.9	13.9	13.9	14.0
		Hi PR	274	275	277	282	317	318	320	325	362	363	365	370	410	411	413	418	462	464	466	470	518	519	521	526
		Lo PR	127	129	132	137	135	136	140	145	142	143	146	152	147	149	152	157	153	154	158	163	160	161	164	170
	880	MBh	27.8	28.2	29.0	30.2	27.6	28.0	28.8	30.0	26.9	27.3	28.1	29.3	25.7	26.1	26.9	28.1	24.2	24.6	25.4	26.6	22.8	23.2	24.0	25.3
		S/T	1.00	0.93	0.80	0.66	1.00	1.00	0.81	0.67	1.00	1.00	0.83	0.69	1.00	1.00	0.85	0.71	1.00	1.00	1.00	0.73	1.00	1.00	1.00	0.78
		ΔT	27	25	22	19	27	25	22	19	27	26	23	19	27	25	22	19	27	25	22	19	28	26	23	20
		kW	1.98	1.98	1.97	1.99	2.23	2.23	2.23	2.24	2.51	2.51	2.50	2.52	2.81	2.81	2.81	2.83	3.15	3.15	3.14	3.16	3.55	3.54	3.54	3.56
		Amps	7.2	7.2	7.2	7.2	8.3	8.3	8.2	8.3	9.5	9.5	9.5	9.5	10.8	10.8	10.8	10.8	12.3	12.3	12.2	12.3	14.0	14.0	14.0	14.0
		Hi PR	277	278	280	284	320	321	323	327	365	366	368	372	413	414	416	421	465	466	468	473	521	522	524	529
		Lo PR	129	131	134	140	137	139	142	147	144	145	148	154	149	151	154	159	155	156	160	165	162	163	167	172
	1010	MBh	28.3	28.7	29.5	30.7	28.1	28.5	29.3	30.5	27.4	27.8	28.6	29.8	26.2	26.6	27.4	28.6	24.7	25.1	25.9	27.1	23.4	23.7	24.5	25.8
		S/T	1.00	0.97	0.84	0.70	1.00	1.00	0.84	0.70	1.00	1.00	0.87	0.73	1.00	1.00	0.89	0.75	1.00	1.00	1.00	0.77	1.00	1.00	1.00	0.82
		ΔT	26	24	21	18	26	24	21	18	26	25	22	18	26	24	21	18	26	24	21	18	27	25	22	19
		kW	1.99	1.99	1.99	2.01	2.24	2.24	2.24	2.26	2.52	2.52	2.52	2.54	2.83	2.82	2.82	2.84	3.16	3.16	3.16	3.18	3.56	3.56	3.55	3.57
		Amps	7.2	7.2	7.2	7.3	8.3	8.3	8.3	8.4	9.5	9.5	9.5	9.6	10.8	10.8	10.8	10.9	12.3	12.3	12.3	12.4	14.0	14.0	14.0	14.1
		Hi PR	279	280	282	287	322	323	325	330	367	368	370	375	416	417	419	423	468	469	471	476	524	525	527	531
		Lo PR	132	133	137	142	140	141	144	150	146	148	151	156	152	153	157	162	157	159	162	167	164	166	169	174

IDB = Entering Indoor Dry Bulb Temperature

Shaded area is AHRI conditions

kW = Total system power

High and low pressures are measured at the liquid and suction service valves.

Amps = outdoor unit amps (comp.+fan)

Airflow may vary depending on actual ambient conditions and system operation modes.

Expanded Cooling Data — DX6VSS3610A* / CAPEA3026*4A* + DTA119A71

			Outdoor Ambient Temperature																							
			65°F				75°F				85°F				95°F				105°F				115°F			
			Entering Indoor Wet Bulb Temperature																							
IDB	Airflow		59	63	67	71	59	63	67	71	59	63	67	71	59	63	67	71	59	63	67	71	59	63	67	71
70	1070	MBh	30.6	32.7	34.3		32.6	33.1	34.0		31.7	32.2	33.2		30.2	30.7	31.7		28.4	28.9	29.9		26.8	27.2	28.2	
		S/T	0.63	0.54	0.37		0.59	0.51	0.38		0.61	0.54	0.40		0.63	0.56	0.42		1.00	0.58	0.45		1.00	0.63	0.50	
		ΔT	19	18	12		16	14	12		16	15	12		16	14	12		16	14	11		17	15	12	
		kW	2.05	2.21	2.30		2.60	2.60	2.59		2.93	2.93	2.93		3.29	3.29	3.29		3.70	3.69	3.69		4.17	4.17	4.16	
		Amps	7.5	8.1	8.3		9.7	9.6	9.6		11.1	11.1	11.1		12.7	12.7	12.6		14.4	14.4	14.4		16.5	16.5	16.4	
		Hi PR	266	269	274		314	315	317		359	360	362		407	408	410		459	460	462		515	516	518	
		Lo PR	121	122	126		129	130	133		135	137	140		141	142	145		146	147	151		153	154	157	
	1260	MBh	32.7	33.9	34.8		33.1	33.6	34.6		32.2	32.7	33.7		30.8	31.2	32.2		28.9	29.4	30.4		27.3	27.8	28.7	
		S/T	0.70	0.58	0.45		0.66	0.59	0.45		0.69	0.61	0.48		0.71	0.63	0.50		1.00	0.65	0.52		1.00	0.71	0.57	
		ΔT	18	13	11		15	13	11		15	14	11		15	13	11		15	13	10		15	14	11	
		kW	2.23	2.32	2.32		2.62	2.62	2.61		2.95	2.95	2.95		3.31	3.31	3.31		3.72	3.71	3.71		4.19	4.19	4.18	
		Amps	8.2	8.4	8.4		9.7	9.7	9.7		11.2	11.2	11.1		12.7	12.7	12.7		14.5	14.5	14.5		16.5	16.5	16.5	
		Hi PR	271	275	277		317	318	320		362	363	365		410	411	413		462	463	465		518	519	521	
		Lo PR	122	125	128		131	132	135		137	139	142		143	144	147		148	150	153		155	156	159	
	1450	MBh	34.0	34.5	35.5		33.7	34.2	35.2		32.9	33.3	34.3		31.4	31.9	32.8		29.6	30.1	31.0		27.9	28.4	29.4	
		S/T	0.70	0.62	0.49		0.70	0.63	0.49		0.73	0.65	0.52		1.00	0.67	0.54		1.00	0.69	0.56		1.00	0.74	0.61	
		ΔT	14	12	10		14	12	10		14	13	10		14	12	10		14	12	10		15	13	10	
		kW	2.34	2.34	2.33		2.64	2.63	2.63		2.97	2.97	2.96		3.33	3.33	3.32		3.73	3.73	3.72		4.20	4.20	4.20	
		Amps	8.5	8.5	8.5		9.8	9.8	9.8		11.2	11.2	11.2		12.8	12.8	12.8		14.6	14.6	14.5		16.6	16.6	16.6	
		Hi PR	277	278	280		319	321	323		364	366	367		413	414	416		465	466	468		520	522	524	
		Lo PR	126	127	130		133	135	138		140	141	144		145	147	150		150	152	155		157	159	162	
75	850	MBh	32.3	32.8	33.7	35.2	32.0	32.5	33.4	34.9	31.2	31.6	32.6	34.1	29.7	30.2	31.1	32.6	27.9	28.4	29.4	30.8	26.3	26.8	27.7	25.9
		S/T	0.72	0.64	0.51	0.37	0.73	0.65	0.51	0.37	1.00	0.68	0.54	0.40	1.00	0.69	0.56	0.42	1.00	0.72	0.58	0.44	1.00	1.00	0.63	0.52
		ΔT	20	19	16	13	20	19	16	13	20	19	16	13	20	19	16	13	20	18	16	13	21	19	17	15
		kW	2.67	2.67	2.66	2.69	3.01	3.01	3.00	3.03	3.39	3.39	3.38	3.41	3.80	3.80	3.79	3.82	4.26	4.26	4.25	4.28	4.80	4.80	4.79	3.98
		Amps	9.5	9.5	9.4	9.6	11.0	10.9	10.9	11.0	12.6	12.6	12.6	12.7	14.4	14.4	14.4	14.5	16.4	16.4	16.4	16.5	18.7	18.7	18.7	15.2
		Hi PR	281	282	284	289	325	326	328	333	371	373	375	379	421	423	424	429	475	476	478	483	533	534	536	533
		Lo PR	125	126	130	135	132	134	137	143	139	141	144	149	145	146	150	155	150	152	155	160	157	159	162	167
	1000	MBh	32.8	33.3	34.2	35.7	32.5	33.0	33.9	35.4	31.7	32.1	33.1	34.6	30.2	**30.7**	31.6	33.1	28.4	28.9	29.9	31.3	26.8	27.3	28.2	26.3
		S/T	0.80	0.72	0.58	0.44	1.00	0.73	0.59	0.45	1.00	0.75	0.62	0.47	1.00	**0.77**	0.63	0.49	1.00	0.79	0.66	0.51	1.00	1.00	0.71	0.60
		ΔT	19	18	15	12	19	18	15	12	19	18	15	12	19	**18**	15	12	19	17	14	11	20	18	15	14
		kW	2.69	2.69	2.68	2.71	3.03	3.03	3.02	3.05	3.41	3.41	3.40	3.43	3.82	**3.82**	3.81	3.84	4.28	4.28	4.27	4.30	4.82	4.82	4.81	3.99
		Amps	9.6	9.6	9.5	9.6	11.1	11.0	11.0	11.1	12.7	12.7	12.7	12.8	14.5	**14.5**	14.5	14.6	16.5	16.5	16.5	16.6	18.8	18.8	18.8	15.2
		Hi PR	283	285	287	292	328	329	331	336	374	375	377	382	424	**425**	427	432	478	479	481	486	536	537	539	536
		Lo PR	127	129	132	137	135	136	139	145	141	143	146	151	147	**149**	152	157	153	154	157	163	159	161	164	170
	1150	MBh	33.4	33.9	34.8	36.3	33.1	33.6	34.6	36.0	32.3	32.7	33.7	35.2	30.8	31.3	32.3	33.7	29.1	29.5	30.5	32.0	27.4	27.9	28.9	26.9
		S/T	0.83	0.76	0.62	0.48	1.00	0.76	0.63	0.48	1.00	0.79	0.65	0.51	1.00	0.81	0.67	0.53	1.00	1.00	0.69	0.55	1.00	1.00	0.75	0.63
		ΔT	18	17	14	11	18	17	14	11	18	17	14	11	18	17	14	11	18	16	14	11	19	17	14	13
		kW	2.71	2.71	2.70	2.73	3.05	3.05	3.04	3.07	3.43	3.43	3.42	3.45	3.84	3.84	3.83	3.86	4.30	4.30	4.29	4.32	4.84	4.84	4.83	4.01
		Amps	9.6	9.6	9.6	9.7	11.1	11.1	11.1	11.2	12.8	12.8	12.7	12.9	14.6	14.6	14.5	14.6	16.6	16.6	16.5	16.6	18.9	18.9	18.9	15.3
		Hi PR	286	287	289	294	331	332	334	339	377	378	380	385	427	428	430	435	481	482	484	489	538	540	542	539
		Lo PR	130	131	134	140	137	139	142	147	144	145	149	154	149	151	154	160	155	157	160	165	162	163	167	172

IDB = Entering Indoor Dry Bulb Temperature

Shaded area is ACCA (TVA) conditions

kW = Total system power

High and low pressures are measured at the liquid and suction service valves.

Amps = outdoor unit amps (comp.+fan)

Airflow may vary depending on actual ambient conditions and system operation modes.

Expanded Cooling Data — DX6VSS3610A*/CAPEA3026*4A*+DTA119A71 (cont.)

			Outdoor Ambient Temperature																							
			65°F				75°F				85°F				95°F				105°F				115°F			
			Entering Indoor Wet Bulb Temperature																							
IDB	Airflow		59	63	67	71	59	63	67	71	59	63	67	71	59	63	67	71	59	63	67	71	59	63	67	71
80	850	MBh	32.5	32.9	33.9	35.4	32.2	32.6	33.6	35.1	31.3	31.8	32.8	34.2	29.9	30.3	31.3	32.8	28.1	28.6	29.5	31.0	26.5	26.9	27.9	26.0
		S/T	1.00	0.77	0.63	0.49	1.00	0.78	0.64	0.50	1.00	0.80	0.67	0.52	1.00	1.00	0.68	0.54	1.00	1.00	0.71	0.56	1.00	1.00	0.76	0.65
		ΔT	24	22	19	16	24	22	19	16	24	22	19	16	24	22	19	16	23	22	19	16	24	23	20	19
		kW	2.67	2.67	2.66	2.69	3.01	3.01	3.00	3.03	3.39	3.39	3.38	3.41	3.80	3.80	3.79	3.82	4.26	4.26	4.25	4.28	4.80	4.80	4.79	3.98
		Amps	9.5	9.5	9.4	9.6	11.0	11.0	10.9	11.0	12.6	12.6	12.6	12.7	14.4	14.4	14.4	14.5	16.4	16.4	16.4	16.5	18.7	18.7	18.7	15.2
		Hi PR	281	282	284	289	325	327	329	333	372	373	375	380	422	423	425	430	476	477	479	484	533	534	536	534
		Lo PR	125	127	130	135	133	135	138	143	140	141	144	150	145	147	150	155	151	152	156	161	158	159	163	168
	1000	MBh	33.0	33.4	34.4	35.9	32.7	33.1	34.1	35.6	31.8	32.3	33.3	34.7	30.4	30.8	**31.8**	33.3	28.6	29.1	30.0	31.5	27.0	27.4	28.4	26.5
		S/T	1.00	0.85	0.71	0.57	1.00	0.85	0.72	0.57	1.00	0.88	0.74	0.60	1.00	1.00	**0.76**	0.62	1.00	1.00	0.78	0.64	1.00	1.00	0.83	0.73
		ΔT	23	21	18	15	23	21	18	15	23	21	18	15	23	21	**18**	15	22	21	18	15	23	22	19	18
		kW	2.69	2.69	2.68	2.71	3.03	3.03	3.02	3.05	3.41	3.41	3.41	3.43	3.82	3.82	**3.82**	3.84	4.28	4.28	4.28	4.30	4.82	4.82	4.82	3.99
		Amps	9.6	9.6	9.5	9.7	11.1	11.0	11.0	11.1	12.7	12.7	12.7	12.8	14.5	14.5	**14.5**	14.6	16.5	16.5	16.5	16.6	18.8	18.8	18.8	15.2
		Hi PR	284	285	287	292	328	330	331	336	375	376	378	383	425	426	**428**	433	479	480	482	487	536	537	539	537
		Lo PR	128	129	132	138	135	137	140	145	142	143	147	152	148	149	**152**	158	153	155	158	163	160	162	165	170
	1150	MBh	33.6	34.0	35.0	36.5	33.3	33.8	34.7	36.2	32.5	32.9	33.9	35.4	31.0	31.5	32.4	33.9	29.2	29.7	30.6	32.1	27.6	28.1	29.0	27.0
		S/T	1.00	0.88	0.75	0.60	1.00	0.89	0.75	0.61	1.00	1.00	0.78	0.64	1.00	1.00	0.80	0.66	1.00	1.00	0.82	0.68	1.00	1.00	1.00	0.77
		ΔT	22	20	17	14	22	20	17	14	22	20	17	14	22	20	17	14	21	20	17	14	22	21	18	17
		kW	2.71	2.71	2.70	2.73	3.05	3.05	3.04	3.07	3.43	3.43	3.42	3.45	3.84	3.84	3.83	3.86	4.30	4.30	4.29	4.32	4.84	4.84	4.83	4.01
		Amps	9.7	9.6	9.6	9.7	11.1	11.1	11.1	11.2	12.8	12.8	12.8	12.9	14.6	14.6	14.5	14.7	16.6	16.6	16.5	16.7	18.9	18.9	18.9	15.3
		Hi PR	287	288	290	295	331	332	334	339	377	379	381	386	427	429	431	436	481	483	485	489	539	540	542	539
		Lo PR	130	132	135	140	138	139	142	148	144	146	149	154	150	152	155	160	156	157	160	166	162	164	167	173
85	850	MBh	33.0	33.5	34.4	35.9	32.7	33.2	34.1	35.6	31.9	32.3	33.3	34.8	30.4	30.9	31.8	33.3	28.6	29.1	30.1	31.5	27.0	27.5	28.4	26.5
		S/T	1.00	0.87	0.74	0.59	1.00	1.00	0.74	0.60	1.00	1.00	0.77	0.62	1.00	1.00	0.79	0.64	1.00	1.00	0.81	0.66	1.00	1.00	1.00	0.75
		ΔT	27	25	22	19	27	25	22	19	27	25	22	20	27	25	22	19	26	25	22	19	27	26	23	22
		kW	2.68	2.67	2.67	2.70	3.02	3.02	3.01	3.04	3.40	3.40	3.39	3.42	3.81	3.81	3.80	3.83	4.27	4.27	4.26	4.29	4.81	4.81	4.80	3.98
		Amps	9.5	9.5	9.5	9.6	11.0	11.0	11.0	11.1	12.6	12.6	12.6	12.7	14.4	14.4	14.4	14.5	16.4	16.4	16.4	16.5	18.8	18.8	18.7	15.2
		Hi PR	282	284	286	290	327	328	330	335	373	374	376	381	423	424	426	431	477	478	480	485	535	536	538	535
		Lo PR	127	129	132	137	135	136	140	145	142	143	146	152	147	149	152	157	153	154	157	163	160	161	164	170
	1000	MBh	33.5	34.0	34.9	36.4	33.2	33.7	34.6	36.1	32.4	32.8	33.8	35.3	30.9	31.4	32.3	33.8	29.1	29.6	30.6	32.0	27.5	28.0	28.9	26.9
		S/T	1.00	0.95	0.81	0.67	1.00	1.00	0.82	0.67	1.00	1.00	0.84	0.70	1.00	1.00	0.86	0.72	1.00	1.00	1.00	0.74	1.00	1.00	1.00	0.83
		ΔT	26	24	21	18	26	24	21	18	26	24	21	18	26	24	21	18	25	24	21	18	26	25	22	21
		kW	2.70	2.70	2.69	2.72	3.04	3.04	3.03	3.06	3.42	3.42	3.41	3.44	3.83	3.83	3.82	3.85	4.29	4.29	4.28	4.31	4.83	4.83	4.82	4.00
		Amps	9.6	9.6	9.6	9.7	11.1	11.1	11.0	11.2	12.7	12.7	12.7	12.8	14.5	14.5	14.5	14.6	16.5	16.5	16.5	16.6	18.9	18.9	18.8	15.3
		Hi PR	285	287	288	293	330	331	333	338	376	377	379	384	426	427	429	434	480	481	483	488	537	539	541	538
		Lo PR	129	131	134	140	137	139	142	147	144	145	148	154	149	151	154	159	155	156	160	165	162	163	167	172
	1150	MBh	34.1	34.6	35.6	37.0	33.8	34.3	35.3	36.7	33.0	33.5	34.4	35.9	31.5	32.0	33.0	34.4	29.8	30.2	31.2	32.7	28.1	28.6	29.6	27.5
		S/T	1.00	0.98	0.85	0.71	1.00	1.00	0.86	0.71	1.00	1.00	0.88	0.74	1.00	1.00	0.90	0.76	1.00	1.00	1.00	0.78	1.00	1.00	1.00	0.87
		ΔT	25	23	20	17	25	23	20	17	25	23	20	17	25	23	20	17	24	23	20	17	25	24	21	20
		kW	2.72	2.71	2.71	2.73	3.06	3.05	3.05	3.07	3.44	3.43	3.43	3.46	3.85	3.85	3.84	3.87	4.31	4.31	4.30	4.33	4.85	4.85	4.84	4.01
		Amps	9.7	9.7	9.6	9.8	11.2	11.2	11.1	11.2	12.8	12.8	12.8	12.9	14.6	14.6	14.6	14.7	16.6	16.6	16.6	16.7	18.9	18.9	18.9	15.3
		Hi PR	288	289	291	296	332	334	336	340	379	380	382	387	429	430	432	437	483	484	486	491	540	541	543	541
		Lo PR	132	134	137	142	140	141	144	150	146	148	151	156	152	153	157	162	157	159	162	167	164	166	169	174

IDB = Entering Indoor Dry Bulb Temperature

Shaded area is AHRI conditions

kW = Total system power

High and low pressures are measured at the liquid and suction service valves.

Amps = outdoor unit amps (comp.+fan)

Airflow may vary depending on actual ambient conditions and system operation modes.

EXPANDED COOLING DATA — DX6VSS4210A*/ CAPE4860*4A* + DTA119A71

			Outdoor Ambient Temperature																							
			65°F				75°F				85°F				95°F				105°F				115°F			
			Entering Indoor Wet Bulb Temperature																							
IDB	Airflow		59	63	67	71	59	63	67	71	59	63	67	71	59	63	67	71	59	63	67	71	59	63	67	71
70	1120	MBh	40.1	40.7	41.9		39.7	40.3	41.5		38.7	39.2	40.4		36.9	37.4	38.6		34.7	35.2	36.4		30.6	31.1	32.2	
		S/T	0.58	0.51	0.37		0.59	0.51	0.38		0.61	0.54	0.40		0.63	0.56	0.42		0.65	0.58	0.44		1.00	0.62	0.49	
		ΔT	19	18	14		19	18	14		20	18	14		19	18	14		19	17	14		22	20	16	
		kW	3.18	3.18	3.17		3.62	3.61	3.61		4.10	4.10	4.09		4.63	4.63	4.62		5.22	5.22	5.21		5.26	5.26	5.25	
		Amps	12.4	12.4	12.3		14.3	14.2	14.2		16.4	16.4	16.3		18.7	18.7	18.6		21.2	21.2	21.2		21.4	21.4	21.4	
		Hi PR	268	270	271		311	312	314		355	356	358		403	404	406		455	456	458		501	502	504	
		Lo PR	116	118	121		124	125	128		130	131	134		135	137	139		140	142	145		144	146	149	
	1320	MBh	40.7	41.3	42.5		40.4	40.9	42.1		39.3	39.9	41.1		37.5	38.1	39.3		35.3	35.9	37.1		31.2	31.7	32.8	
		S/T	0.66	0.58	0.45		0.66	0.59	0.45		0.69	0.61	0.48		0.71	0.63	0.50		0.73	0.65	0.52		1.00	0.70	0.56	
		ΔT	18	16	13		18	16	13		18	16	13		18	16	13		18	16	13		20	18	15	
		kW	3.21	3.21	3.20		3.65	3.64	3.63		4.13	4.13	4.12		4.66	4.66	4.65		5.25	5.25	5.24		5.29	5.28	5.28	
		Amps	12.5	12.5	12.4		14.4	14.4	14.3		16.5	16.5	16.5		18.8	18.8	18.7		21.4	21.3	21.3		21.5	21.5	21.5	
		Hi PR	271	272	274		314	315	317		358	359	361		406	407	409		458	459	461		504	505	507	
		Lo PR	119	120	123		126	127	130		132	133	136		137	139	142		142	144	147		146	148	151	
	1520	MBh	41.5	42.1	43.3		41.1	41.7	42.9		40.1	40.7	41.9		38.3	38.9	40.1		36.1	36.6	37.8		31.9	32.4	33.6	
		S/T	0.70	0.62	0.49		0.70	0.63	0.49		0.73	0.65	0.52		0.75	0.67	0.54		1.00	0.69	0.56		1.00	0.73	0.60	
		ΔT	17	15	12		17	15	12		17	15	12		17	15	12		17	15	12		19	17	14	
		kW	3.23	3.23	3.22		3.67	3.67	3.66		4.16	4.15	4.14		4.68	4.68	4.67		5.27	5.27	5.26		5.31	5.30	5.30	
		Amps	12.6	12.6	12.5		14.5	14.5	14.4		16.6	16.6	16.6		18.9	18.9	18.8		21.5	21.4	21.4		21.6	21.6	21.6	
		Hi PR	274	275	277		316	318	319		361	362	364		409	410	412		460	461	463		507	508	510	
		Lo PR	121	122	125		128	129	132		134	136	139		139	141	144		145	146	149		149	150	153	
75	1120	MBh	40.1	40.7	41.9	43.7	39.7	40.3	41.5	43.4	38.7	39.3	40.5	42.3	36.9	37.5	38.7	40.5	34.7	35.3	36.5	38.3	30.6	31.1	32.3	32.4
		S/T	0.71	0.63	0.50	0.36	0.72	0.64	0.51	0.37	0.74	0.67	0.53	0.39	1.00	0.68	0.55	0.41	1.00	0.71	0.57	0.43	1.00	0.75	0.62	0.48
		ΔT	23	21	18	15	23	21	18	15	23	22	18	15	23	21	18	15	23	21	18	14	26	24	20	17
		kW	3.18	3.18	3.17	3.20	3.61	3.61	3.60	3.64	4.10	4.10	4.09	4.12	4.63	4.63	4.62	4.65	5.22	5.21	5.21	5.24	5.26	5.26	5.25	4.91
		Amps	12.4	12.3	12.3	12.5	14.3	14.2	14.2	14.3	16.4	16.4	16.3	16.5	18.7	18.6	18.6	18.8	21.2	21.2	21.2	21.3	21.4	21.4	21.4	19.9
		Hi PR	269	270	272	276	311	312	314	319	356	357	359	363	403	405	406	411	455	456	458	463	501	502	504	504
		Lo PR	117	118	121	126	124	125	128	133	130	131	134	139	135	137	140	145	140	142	145	150	144	146	149	155
	1320	MBh	40.7	41.3	42.5	44.3	40.4	40.9	42.1	44.0	39.3	39.9	41.1	42.9	37.5	**38.1**	39.3	41.1	35.3	35.9	37.1	38.9	31.2	31.7	32.8	33.0
		S/T	0.79	0.71	0.58	0.44	0.79	0.72	0.58	0.44	0.82	0.74	0.61	0.47	1.00	**0.76**	0.63	0.49	1.00	0.78	0.65	0.51	1.00	0.82	0.69	0.56
		ΔT	22	20	17	13	22	20	17	13	22	20	17	14	22	**20**	17	13	22	20	17	13	25	23	19	15
		kW	3.21	3.20	3.20	3.23	3.64	3.64	3.63	3.67	4.13	4.13	4.12	4.15	4.66	**4.65**	4.65	4.68	5.25	5.24	5.24	5.27	5.28	5.28	5.28	4.93
		Amps	12.5	12.5	12.4	12.6	14.4	14.4	14.3	14.5	16.5	16.5	16.4	16.6	18.8	**18.8**	18.7	18.9	21.3	21.3	21.3	21.4	21.5	21.5	21.5	20.0
		Hi PR	271	273	275	279	314	315	317	322	358	360	361	366	406	**407**	409	414	458	459	461	466	504	505	507	507
		Lo PR	119	120	123	128	126	127	130	135	132	133	136	141	137	**139**	142	147	142	144	147	152	146	148	151	157
	1520	MBh	41.5	42.1	43.3	45.1	41.2	41.7	42.9	44.8	40.1	40.7	41.9	43.7	38.3	38.9	40.1	41.9	36.1	36.7	37.9	39.7	31.9	32.5	33.6	33.7
		S/T	0.82	0.75	0.61	0.47	0.83	0.75	0.62	0.48	1.00	0.78	0.64	0.50	1.00	0.80	0.66	0.52	1.00	0.82	0.69	0.54	1.00	0.86	0.73	0.60
		ΔT	21	19	16	12	21	19	16	12	21	19	16	13	21	19	16	12	21	19	15	12	23	21	18	14
		kW	3.23	3.23	3.22	3.25	3.67	3.66	3.65	3.69	4.15	4.15	4.14	4.18	4.68	4.68	4.67	4.70	5.27	5.27	5.26	5.29	5.30	5.30	5.29	4.95
		Amps	12.6	12.6	12.5	12.7	14.5	14.5	14.4	14.6	16.6	16.6	16.5	16.7	18.9	18.9	18.8	19.0	21.4	21.4	21.4	21.5	21.6	21.6	21.6	20.0
		Hi PR	274	275	277	282	317	318	320	324	361	362	364	369	409	410	412	417	461	462	464	468	507	508	510	509
		Lo PR	121	122	125	130	128	129	132	137	134	136	139	144	140	141	144	149	145	146	149	154	149	150	153	159

IDB = Entering Indoor Dry Bulb Temperature

Shaded area is ACCA (TVA) conditions

kW = Total system power

High and low pressures are measured at the liquid and suction service valves.

Amps = outdoor unit amps (comp.+fan)

Airflow may vary depending on actual ambient conditions and system operation modes.

Expanded Cooling Data — DX6VSS4210A*/ CAPE4860*4A* + DTA119A711 (cont.)

			Outdoor Ambient Temperature																							
			65°F				75°F				85°F				95°F				105°F				115°F			
			Entering Indoor Wet Bulb Temperature																							
IDB	Airflow		59	63	67	71	59	63	67	71	59	63	67	71	59	63	67	71	59	63	67	71	59	63	67	71
80	1120	MBh	40.3	40.9	42.1	43.9	40.0	40.5	41.7	43.6	38.9	39.5	40.7	42.5	37.1	37.7	38.9	40.7	34.9	35.5	36.7	38.5	30.8	31.3	32.5	32.6
		S/T	0.83	0.76	0.62	0.48	1.00	0.76	0.63	0.49	1.00	0.79	0.66	0.51	1.00	0.81	0.67	0.53	1.00	0.83	0.70	0.56	1.00	1.00	0.74	0.61
		ΔT	27	25	22	19	27	25	22	19	27	26	22	19	27	25	22	19	27	25	22	18	30	28	25	21
		kW	3.18	3.18	3.17	3.20	3.62	3.61	3.61	3.64	4.10	4.10	4.09	4.13	4.63	4.63	4.62	4.65	5.22	5.22	5.21	5.24	5.26	5.26	5.25	4.91
		Amps	12.4	12.4	12.3	12.5	14.3	14.2	14.2	14.4	16.4	16.4	16.3	16.5	18.7	18.7	18.6	18.8	21.2	21.2	21.2	21.3	21.4	21.4	21.4	19.9
		Hi PR	269	270	272	277	312	313	315	319	356	357	359	364	404	405	407	412	456	457	459	463	502	503	505	504
		Lo PR	117	118	121	126	124	126	129	134	130	132	135	140	136	137	140	145	141	142	145	150	145	146	149	156
	1320	MBh	40.9	41.5	42.7	44.5	40.6	41.2	42.4	44.2	39.5	40.1	41.3	43.1	37.7	38.3	**39.5**	41.3	35.5	36.1	37.3	39.1	31.4	31.9	33.0	33.2
		S/T	0.91	0.83	0.70	0.56	1.00	0.84	0.71	0.57	1.00	0.86	0.73	0.59	1.00	0.88	**0.75**	0.61	1.00	0.91	0.77	0.63	1.00	1.00	0.81	0.68
		ΔT	26	24	21	17	26	24	21	17	26	24	21	18	26	24	**21**	17	26	24	20	17	29	27	23	19
		kW	3.21	3.21	3.20	3.23	3.65	3.64	3.63	3.67	4.13	4.13	4.12	4.15	4.66	4.66	**4.65**	4.68	5.25	5.24	5.24	5.27	5.29	5.28	5.28	4.93
		Amps	12.5	12.5	12.4	12.6	14.4	14.4	14.3	14.5	16.5	16.5	16.5	16.6	18.8	18.8	**18.7**	18.9	21.4	21.3	21.3	21.5	21.5	21.5	21.5	20.0
		Hi PR	272	273	275	280	314	316	317	322	359	360	362	367	407	408	**410**	414	458	459	461	466	505	506	508	507
		Lo PR	119	121	124	128	126	128	131	136	132	134	137	142	138	139	**142**	147	143	144	147	152	147	148	151	158
	1520	MBh	41.7	42.3	43.5	45.3	41.4	41.9	43.1	45.0	40.3	40.9	42.1	43.9	38.5	39.1	40.3	42.1	36.3	36.9	38.1	39.9	32.1	32.7	33.8	33.9
		S/T	0.95	0.87	0.74	0.60	1.00	0.88	0.74	0.60	1.00	0.90	0.77	0.63	1.00	0.92	0.79	0.65	1.00	1.00	0.81	0.67	1.00	1.00	0.85	0.72
		ΔT	25	23	20	16	25	23	20	16	25	23	20	16	25	23	20	16	24	23	19	16	28	26	22	18
		kW	3.23	3.23	3.22	3.25	3.67	3.66	3.66	3.69	4.16	4.15	4.14	4.18	4.68	4.68	4.67	4.70	5.27	5.27	5.26	5.29	5.31	5.30	5.30	4.95
		Amps	12.6	12.6	12.5	12.7	14.5	14.5	14.4	14.6	16.6	16.6	16.6	16.7	18.9	18.9	18.8	19.0	21.5	21.4	21.4	21.5	21.6	21.6	21.6	20.1
		Hi PR	275	276	278	282	317	318	320	325	362	363	365	369	409	411	412	417	461	462	464	469	507	508	510	510
		Lo PR	121	123	126	131	129	130	133	138	135	136	139	144	140	141	144	149	145	147	150	155	149	151	153	160
85	1120	MBh	41.0	41.6	42.8	44.6	40.6	41.2	42.4	44.2	39.6	40.2	41.4	43.2	37.8	38.3	39.5	41.4	35.6	36.1	37.3	39.2	31.4	32.0	33.1	33.2
		S/T	1.00	0.86	0.72	0.58	1.00	0.86	0.73	0.59	1.00	0.89	0.76	0.61	1.00	1.00	0.77	0.63	1.00	1.00	0.80	0.66	1.00	1.00	0.84	0.71
		ΔT	31	29	26	22	31	29	25	22	31	29	26	22	31	29	25	22	30	29	25	22	34	32	28	25
		kW	3.19	3.19	3.18	3.21	3.63	3.62	3.61	3.65	4.11	4.11	4.10	4.14	4.64	4.64	4.63	4.66	5.23	5.23	5.22	5.25	5.27	5.27	5.26	4.91
		Amps	12.4	12.4	12.4	12.5	14.3	14.3	14.3	14.4	16.4	16.4	16.4	16.5	18.7	18.7	18.7	18.8	21.3	21.3	21.2	21.4	21.4	21.4	21.4	19.9
		Hi PR	270	272	273	278	313	314	316	321	357	358	360	365	405	406	408	413	457	458	460	465	503	504	506	506
		Lo PR	119	120	123	128	126	127	130	135	132	134	137	142	137	139	142	147	143	144	147	152	147	148	151	157
	1320	MBh	41.6	42.2	43.4	45.2	41.3	41.8	43.0	44.9	40.2	40.8	42.0	43.8	38.4	39.0	40.2	42.0	36.2	36.8	38.0	39.8	32.0	32.6	33.7	33.8
		S/T	1.00	0.93	0.80	0.66	1.00	0.94	0.81	0.67	1.00	1.00	0.83	0.69	1.00	1.00	0.85	0.71	1.00	1.00	0.87	0.73	1.00	1.00	0.91	0.78
		ΔT	29	28	24	21	29	27	24	21	29	28	24	21	29	27	24	21	29	27	24	20	32	31	27	23
		kW	3.22	3.21	3.21	3.24	3.65	3.65	3.64	3.68	4.14	4.14	4.13	4.16	4.67	4.66	4.66	4.69	5.26	5.25	5.25	5.28	5.29	5.29	5.28	4.94
		Amps	12.5	12.5	12.5	12.6	14.4	14.4	14.4	14.5	16.5	16.5	16.5	16.6	18.8	18.8	18.8	18.9	21.4	21.4	21.3	21.5	21.6	21.5	21.5	20.0
		Hi PR	273	274	276	281	316	317	319	323	360	361	363	368	408	409	411	416	460	461	463	467	506	507	509	508
		Lo PR	121	122	125	130	128	129	132	137	134	136	139	144	139	141	144	149	145	146	149	154	149	150	153	159
	1520	MBh	42.4	43.0	44.2	46.0	42.0	42.6	43.8	45.6	41.0	41.6	42.8	44.6	39.2	39.8	41.0	42.8	37.0	37.6	38.8	40.6	32.8	33.3	34.4	34.5
		S/T	1.00	0.97	0.84	0.70	1.00	0.98	0.84	0.70	1.00	1.00	0.87	0.73	1.00	1.00	0.89	0.75	1.00	1.00	0.91	0.77	1.00	1.00	0.95	0.82
		ΔT	28	26	23	20	28	26	23	20	28	27	23	20	28	26	23	20	28	26	23	19	31	29	26	22
		kW	3.24	3.24	3.23	3.26	3.68	3.67	3.67	3.70	4.16	4.16	4.15	4.19	4.69	4.69	4.68	4.71	5.28	5.28	5.27	5.30	5.31	5.31	5.30	4.96
		Amps	12.6	12.6	12.6	12.7	14.5	14.5	14.5	14.6	16.6	16.6	16.6	16.7	18.9	18.9	18.9	19.0	21.5	21.5	21.4	21.6	21.6	21.6	21.6	20.1
		Hi PR	276	277	279	284	318	320	321	326	363	364	366	371	411	412	414	418	462	463	465	470	508	510	511	511
		Lo PR	123	125	128	133	130	132	135	140	137	138	141	146	142	143	146	151	147	148	151	156	151	152	155	162

IDB = Entering Indoor Dry Bulb Temperature

Shaded area is AHRI conditions

kW = Total system power

High and low pressures are measured at the liquid and suction service valves.

Amps = outdoor unit amps (comp.+fan)

Airflow may vary depending on actual ambient conditions and system operation modes.

EXPANDED COOLING DATA — DX6VSS4810A*/ CAPE4860*4A* + DTA119A71

			Outdoor Ambient Temperature																							
			65°F				75°F				85°F				95°F				105°F				115°F			
			Entering Indoor Wet Bulb Temperature																							
IDB	Airflow		59	63	67	71	59	63	67	71	59	63	67	71	59	63	67	71	59	63	67	71	59	63	67	71
70	1170	MBh	45.7	46.3	47.7		45.3	45.9	47.3		44.1	44.7	46.1		42.0	42.7	44.0		39.5	40.2	41.5		31.7	32.3	33.4	
		S/T	0.57	0.50	0.36		0.57	0.50	0.37		0.60	0.53	0.40		0.62	0.54	0.41		0.64	0.57	0.43		0.70	0.62	0.49	
		ΔT	20	18	15		20	18	14		20	18	15		20	18	14		19	18	14		22	20	17	
		kW	3.83	3.82	3.81		4.36	4.36	4.35		4.96	4.95	4.95		5.60	5.60	5.59		6.33	6.32	6.31		5.41	5.41	5.40	
		Amps	15.0	15.0	14.9		17.3	17.3	17.2		19.9	19.9	19.8		22.7	22.7	22.6		25.8	25.8	25.8		21.8	21.8	21.8	
		Hi PR	281	282	284		325	327	329		372	373	375		422	423	425		476	477	479		514	515	517	
		Lo PR	115	116	119		122	123	126		128	129	132		133	135	138		138	140	143		142	143	146	
	1380	MBh	46.4	47.0	48.4		46.0	46.6	48.0		44.8	45.4	46.8		42.7	43.4	44.7		40.2	40.9	42.2		32.3	32.9	34.0	
		S/T	0.64	0.57	0.44		0.65	0.57	0.44		0.67	0.60	0.47		0.69	0.62	0.49		0.71	0.64	0.51		1.00	0.70	0.56	
		ΔT	18	17	13		18	17	13		19	17	13		18	17	13		18	16	13		21	19	15	
		kW	3.86	3.86	3.85		4.40	4.39	4.38		4.99	4.99	4.98		5.64	5.63	5.63		6.36	6.36	6.35		5.43	5.43	5.42	
		Amps	15.1	15.1	15.1		17.4	17.4	17.4		20.0	20.0	20.0		22.8	22.8	22.8		26.0	26.0	25.9		21.9	21.9	21.9	
		Hi PR	284	285	287		328	330	331		375	376	378		425	426	428		479	480	482		516	518	520	
		Lo PR	117	118	121		124	125	128		130	131	134		135	137	140		140	142	145		143	145	148	
	1590	MBh	47.3	47.9	49.3		46.8	47.5	48.9		45.7	46.3	47.7		43.6	44.2	45.6		41.1	41.7	43.1		33.1	33.6	34.8	
		S/T	0.68	0.60	0.47		0.68	0.61	0.48		0.71	0.63	0.50		0.73	0.65	0.52		0.75	0.67	0.54		1.00	0.73	0.60	
		ΔT	17	16	12		17	15	12		18	16	12		17	15	12		17	15	12		20	18	14	
		kW	3.89	3.88	3.88		4.42	4.42	4.41		5.02	5.02	5.01		5.67	5.66	5.65		6.39	6.38	6.37		5.45	5.45	5.44	
		Amps	15.2	15.2	15.2		17.6	17.5	17.5		20.2	20.1	20.1		23.0	22.9	22.9		26.1	26.1	26.0		22.0	22.0	22.0	
		Hi PR	287	288	290		331	332	334		378	379	381		428	429	431		482	483	485		519	520	522	
		Lo PR	119	121	123		126	128	130		132	134	137		137	139	142		143	144	147		146	147	150	
75	1170	MBh	45.7	46.4	47.7	49.8	45.3	45.9	47.3	49.4	44.1	44.7	46.1	48.2	42.0	42.7	44.1	46.1	39.5	40.2	41.5	40.3	31.7	32.3	33.5	33.7
		S/T	0.69	0.62	0.49	0.35	0.70	0.63	0.50	0.36	0.72	0.65	0.52	0.38	1.00	0.67	0.54	0.40	1.00	0.69	0.56	0.42	1.00	0.75	0.62	0.48
		ΔT	24	22	18	15	24	22	18	15	24	22	19	15	24	22	18	15	23	22	18	16	27	25	21	17
		kW	3.82	3.82	3.81	3.85	4.36	4.35	4.35	4.39	4.96	4.95	4.94	4.98	5.60	5.60	5.59	5.63	6.32	6.32	6.31	5.48	5.41	5.40	5.40	5.05
		Amps	15.0	14.9	14.9	15.1	17.3	17.3	17.2	17.4	19.9	19.9	19.8	20.0	22.7	22.7	22.6	22.8	25.8	25.8	25.8	22.2	21.8	21.8	21.8	20.3
		Hi PR	281	282	284	289	326	327	329	334	372	373	375	380	422	424	426	430	476	478	480	478	514	515	517	515
		Lo PR	115	116	119	124	122	123	126	131	128	129	132	137	133	135	138	142	138	140	143	144	142	143	146	151
	1380	MBh	46.4	47.1	48.4	50.5	46.0	46.6	48.0	50.1	44.8	45.5	46.8	48.9	42.7	**43.4**	44.8	46.9	40.2	40.9	42.2	40.9	32.3	32.9	34.1	34.2
		S/T	0.76	0.69	0.56	0.42	0.77	0.70	0.57	0.43	0.79	0.72	0.59	0.45	1.00	**0.74**	0.61	0.47	1.00	0.76	0.63	0.49	1.00	0.82	0.69	0.55
		ΔT	22	21	17	14	22	20	17	14	23	21	17	14	22	**20**	17	14	22	20	17	15	25	23	20	16
		kW	3.86	3.85	3.84	3.89	4.39	4.39	4.38	4.42	4.99	4.99	4.98	5.02	5.63	**5.63**	5.62	5.66	6.36	6.35	6.34	5.51	5.43	5.43	5.42	5.07
		Amps	15.1	15.1	15.0	15.2	17.4	17.4	17.4	17.5	20.0	20.0	20.0	20.1	22.8	**22.8**	22.8	22.9	26.0	25.9	25.9	22.3	21.9	21.9	21.9	20.4
		Hi PR	284	285	287	292	329	330	332	337	375	376	378	383	425	**426**	428	433	479	480	482	480	517	518	520	518
		Lo PR	117	118	121	126	124	125	128	133	130	131	134	139	135	**137**	140	144	140	142	145	146	143	145	148	153
	1590	MBh	47.3	47.9	49.3	51.4	46.9	47.5	48.9	51.0	45.7	46.3	47.7	49.8	43.6	44.3	45.6	47.7	41.1	41.8	43.1	41.7	33.1	33.6	34.8	34.9
		S/T	0.80	0.73	0.60	0.46	0.81	0.73	0.60	0.47	0.83	0.76	0.63	0.49	1.00	0.78	0.65	0.51	1.00	0.80	0.67	0.53	1.00	0.86	0.73	0.59
		ΔT	21	19	16	13	21	19	16	13	21	20	16	13	21	19	16	13	21	19	16	14	24	22	18	15
		kW	3.89	3.88	3.87	3.91	4.42	4.42	4.41	4.45	5.02	5.01	5.00	5.04	5.66	5.66	5.65	5.69	6.38	6.38	6.37	5.53	5.45	5.45	5.44	5.09
		Amps	15.2	15.2	15.2	15.3	17.5	17.5	17.5	17.7	20.1	20.1	20.1	20.3	22.9	22.9	22.9	23.1	26.1	26.1	26.0	22.4	22.0	22.0	22.0	20.5
		Hi PR	287	288	290	295	331	333	335	339	378	379	381	386	428	429	431	436	482	483	485	483	519	521	522	521
		Lo PR	119	121	123	128	126	128	131	135	132	134	137	142	137	139	142	147	143	144	147	149	146	147	150	155

IDB = Entering Indoor Dry Bulb Temperature

Shaded area is ACCA (TVA) conditions

kW = Total system power

High and low pressures are measured at the liquid and suction service valves.

Amps = outdoor unit amps (comp.+fan)

Airflow may vary depending on actual ambient conditions and system operation modes.

Expanded Cooling Data — DX6VSS4810A*/ CAPE4860*4A* + DTA119A71 (cont.)

			Outdoor Ambient Temperature																							
			65°F				75°F				85°F				95°F				105°F				115°F			
			Entering Indoor Wet Bulb Temperature																							
IDB	Airflow		59	63	67	71	59	63	67	71	59	63	67	71	59	63	67	71	59	63	67	71	59	63	67	71
80	1170	MBh	45.9	46.6	48.0	50.0	45.5	46.2	47.5	49.6	44.3	45.0	46.4	48.4	42.3	42.9	44.3	46.4	39.8	40.4	41.8	40.5	31.9	32.5	33.7	33.8
		S/T	0.81	0.74	0.61	0.47	0.82	0.75	0.62	0.48	1.00	0.77	0.64	0.50	1.00	0.79	0.66	0.52	1.00	0.81	0.68	0.54	1.00	0.87	0.74	0.60
		ΔT	28	26	22	19	28	26	22	19	28	26	23	19	28	26	22	19	27	26	22	21	31	29	25	22
		kW	3.83	3.82	3.81	3.85	4.36	4.36	4.35	4.39	4.96	4.95	4.95	4.99	5.60	5.60	5.59	5.63	6.33	6.32	6.31	5.48	5.41	5.40	5.40	5.05
		Amps	15.0	14.9	14.9	15.1	17.3	17.3	17.2	17.4	19.9	19.9	19.8	20.0	22.7	22.7	22.6	22.8	25.8	25.8	25.8	22.2	21.8	21.8	21.8	20.3
		Hi PR	282	283	285	290	326	327	329	334	373	374	376	381	423	424	426	431	477	478	480	478	514	516	518	516
		Lo PR	115	117	120	125	122	124	127	132	129	130	133	138	134	135	138	143	139	140	143	145	142	143	146	151
	1380	MBh	46.6	47.3	48.7	50.8	46.2	46.9	48.3	50.3	45.0	45.7	47.1	49.1	43.0	43.6	**45.0**	47.1	40.5	41.1	42.5	41.1	32.5	33.1	34.3	34.4
		S/T	0.89	0.81	0.68	0.54	1.00	0.82	0.69	0.55	1.00	0.84	0.71	0.57	1.00	0.86	**0.73**	0.59	1.00	0.88	0.75	0.61	1.00	1.00	0.81	0.67
		ΔT	26	25	21	18	26	24	21	18	27	25	21	18	26	24	**21**	18	26	24	21	19	29	28	24	20
		kW	3.86	3.86	3.85	3.89	4.40	4.39	4.38	4.42	4.99	4.99	4.98	5.02	5.64	5.63	**5.62**	5.67	6.36	6.36	6.35	5.51	5.43	5.43	5.42	5.08
		Amps	15.1	15.1	15.1	15.2	17.4	17.4	17.4	17.6	20.0	20.0	20.0	20.2	22.8	22.8	**22.8**	23.0	26.0	26.0	25.9	22.3	21.9	21.9	21.9	20.4
		Hi PR	285	286	288	293	329	330	332	337	376	377	379	384	426	427	**429**	434	480	481	483	481	517	518	520	519
		Lo PR	117	119	122	127	124	126	129	134	131	132	135	140	136	137	**140**	145	141	142	145	147	144	145	148	153
	1590	MBh	47.5	48.2	49.5	51.6	47.1	47.8	49.1	51.2	45.9	46.6	47.9	50.0	43.9	44.5	45.9	48.0	41.3	42.0	43.4	41.9	33.3	33.8	35.0	35.1
		S/T	0.92	0.85	0.72	0.58	1.00	0.85	0.72	0.59	1.00	0.88	0.75	0.61	1.00	0.90	0.77	0.63	1.00	0.92	0.79	0.65	1.00	1.00	0.85	0.71
		ΔT	25	23	20	17	25	23	20	17	25	24	20	17	25	23	20	17	25	23	20	18	28	26	23	19
		kW	3.89	3.88	3.87	3.92	4.42	4.42	4.41	4.45	5.02	5.02	5.01	5.05	5.67	5.66	5.65	5.69	6.39	6.38	6.37	5.53	5.45	5.45	5.44	5.09
		Amps	15.2	15.2	15.2	15.4	17.6	17.5	17.5	17.7	20.1	20.1	20.1	20.3	23.0	22.9	22.9	23.1	26.1	26.1	26.0	22.4	22.0	22.0	22.0	20.5
		Hi PR	287	289	291	296	332	333	335	340	378	380	382	386	428	430	432	437	482	484	486	484	520	521	523	521
		Lo PR	120	121	124	129	127	128	131	136	133	134	137	142	138	139	142	147	143	144	147	149	146	148	150	155
85	1170	MBh	46.7	47.4	48.7	50.8	46.3	47.0	48.3	50.4	45.1	45.8	47.1	49.2	43.1	43.7	45.1	47.2	40.5	41.2	42.6	41.2	32.6	33.2	34.3	34.5
		S/T	1.00	0.84	0.71	0.57	1.00	0.84	0.71	0.58	1.00	0.87	0.74	0.60	1.00	1.00	0.76	0.62	1.00	1.00	0.78	0.64	1.00	1.00	0.84	0.70
		ΔT	31	29	26	23	31	29	26	22	31	30	26	23	31	29	26	22	31	29	26	25	35	33	29	25
		kW	3.84	3.83	3.82	3.87	4.37	4.37	4.36	4.40	4.97	4.96	4.96	5.00	5.61	5.61	5.60	5.64	6.34	6.33	6.32	5.49	5.42	5.41	5.41	5.06
		Amps	15.0	15.0	15.0	15.1	17.3	17.3	17.3	17.5	19.9	19.9	19.9	20.0	22.7	22.7	22.7	22.9	25.9	25.9	25.8	22.2	21.9	21.9	21.8	20.3
		Hi PR	283	284	286	291	328	329	331	336	374	375	377	382	424	425	427	432	478	479	481	479	516	517	519	517
		Lo PR	117	119	121	126	124	126	128	133	130	132	135	140	135	137	140	145	141	142	145	147	144	145	148	153
	1380	MBh	47.4	48.1	49.4	51.5	47.0	47.7	49.0	51.1	45.8	46.5	47.8	49.9	43.8	44.4	45.8	47.9	41.2	41.9	43.3	41.8	33.2	33.8	34.9	35.0
		S/T	1.00	0.91	0.78	0.64	1.00	0.92	0.78	0.65	1.00	0.94	0.81	0.67	1.00	1.00	0.83	0.69	1.00	1.00	0.85	0.71	1.00	1.00	0.91	0.77
		ΔT	30	28	25	21	30	28	25	21	30	28	25	21	30	28	25	21	30	28	24	23	33	31	28	24
		kW	3.87	3.87	3.86	3.90	4.41	4.40	4.39	4.43	5.00	5.00	4.99	5.03	5.65	5.64	5.63	5.68	6.37	6.37	6.36	5.52	5.44	5.44	5.43	5.08
		Amps	15.2	15.1	15.1	15.3	17.5	17.5	17.4	17.6	20.1	20.1	20.0	20.2	22.9	22.9	22.8	23.0	26.0	26.0	26.0	22.3	22.0	22.0	21.9	20.4
		Hi PR	286	287	289	294	330	332	334	338	377	378	380	385	427	428	430	435	481	482	484	482	518	520	522	520
		Lo PR	119	121	123	128	126	128	130	135	132	134	137	142	137	139	142	147	143	144	147	149	146	147	150	155
	1590	MBh	48.3	48.9	50.3	52.4	47.9	48.5	49.9	52.0	46.7	47.3	48.7	50.8	44.6	45.3	46.6	48.7	42.1	42.8	44.1	42.6	33.9	34.5	35.7	35.8
		S/T	1.00	0.95	0.82	0.68	1.00	0.95	0.82	0.68	1.00	1.00	0.85	0.71	1.00	1.00	0.86	0.73	1.00	1.00	0.89	0.75	1.00	1.00	0.95	0.81
		ΔT	29	27	24	20	29	27	24	20	29	27	24	20	29	27	24	20	28	27	23	22	32	30	27	23
		kW	3.90	3.89	3.89	3.93	4.43	4.43	4.42	4.46	5.03	5.03	5.02	5.06	5.68	5.67	5.66	5.70	6.40	6.39	6.38	5.54	5.46	5.46	5.45	5.10
		Amps	15.3	15.3	15.2	15.4	17.6	17.6	17.5	17.7	20.2	20.2	20.1	20.3	23.0	23.0	22.9	23.1	26.1	26.1	26.1	22.4	22.1	22.1	22.0	20.5
		Hi PR	289	290	292	297	333	334	336	341	380	381	383	388	430	431	433	438	484	485	487	485	521	522	524	522
		Lo PR	121	123	126	131	128	130	133	138	135	136	139	144	140	141	144	149	145	146	149	151	148	149	152	157

IDB = Entering Indoor Dry Bulb Temperature

Shaded area is AHRI conditions

kW = Total system power

High and low pressures are measured at the liquid and suction service valves.

Amps = outdoor unit amps (comp.+fan)

Airflow may vary depending on actual ambient conditions and system operation modes.

EXPANDED COOLING DATA — DX6VSS6010A*/ CAPE4961*4A* + DTA119A71

			Outdoor Ambient Temperature																							
			65°F				75°F				85°F				95°F				105°F				115°F			
			Entering Indoor Wet Bulb Temperature																							
IDB	Airflow		59	63	67	71	59	63	67	71	59	63	67	71	59	63	67	71	59	63	67	71	59	63	67	71
70	1390	MBh	53.8	54.5	56.2		53.3	54.1	55.7		51.9	52.7	54.3		49.5	50.2	51.8		41.9	42.6	44.1		35.8	36.5	37.8	
		S/T	0.55	0.48	0.35		0.56	0.49	0.36		0.58	0.51	0.38		0.60	0.53	0.40		0.64	0.56	0.43		0.70	0.63	0.50	
		ΔT	19	17	14		19	17	14		19	17	14		19	17	14		21	19	15		20	18	15	
		kW	4.52	4.52	4.51		5.15	5.14	5.13		5.85	5.84	5.83		6.60	6.59	6.58		6.09	6.08	6.08		5.87	5.87	5.86	
		Amps	17.4	17.4	17.3		20.1	20.1	20.1		23.2	23.1	23.1		26.4	26.4	26.4		24.2	24.2	24.2		23.3	23.2	23.2	
		Hi PR	282	283	285		326	327	329		373	374	376		423	424	426		458	459	461		501	502	504	
		Lo PR	112	114	117		119	121	123		125	127	129		130	132	135		132	134	136		138	140	142	
	1640	MBh	54.6	55.4	57.0		54.1	54.9	56.5		52.7	53.5	55.1		50.3	51.1	52.7		42.7	43.4	44.8		36.5	37.2	38.5	
		S/T	0.62	0.55	0.42		0.63	0.56	0.43		0.65	0.58	0.45		0.67	0.60	0.47		0.71	0.64	0.51		0.78	0.71	0.57	
		ΔT	18	16	13		17	16	13		18	16	13		17	16	13		19	17	14		18	17	13	
		kW	4.56	4.56	4.55		5.19	5.18	5.17		5.89	5.88	5.87		6.64	6.64	6.62		6.12	6.12	6.11		5.90	5.89	5.89	
		Amps	17.6	17.6	17.5		20.3	20.3	20.2		23.3	23.3	23.3		26.6	26.6	26.5		24.4	24.3	24.3		23.4	23.4	23.3	
		Hi PR	285	286	288		329	330	332		376	377	379		426	427	429		461	462	464		504	505	507	
		Lo PR	114	116	119		121	123	125		127	129	131		132	134	137		134	136	138		140	142	144	
	1890	MBh	55.7	56.5	58.1		55.2	56.0	57.6		53.8	54.6	56.2		51.4	52.1	53.7		43.6	44.3	45.8		37.4	38.0	39.3	
		S/T	0.66	0.59	0.46		0.66	0.59	0.47		0.69	0.62	0.49		0.71	0.63	0.51		0.75	0.67	0.54		0.82	0.74	0.61	
		ΔT	16	15	12		16	15	11		17	15	12		16	15	11		18	16	13		17	16	12	
		kW	4.60	4.59	4.58		5.22	5.22	5.21		5.92	5.91	5.90		6.67	6.67	6.66		6.15	6.14	6.13		5.92	5.92	5.91	
		Amps	17.7	17.7	17.7		20.4	20.4	20.4		23.5	23.5	23.4		26.8	26.7	26.7		24.5	24.5	24.4		23.5	23.5	23.4	
		Hi PR	287	289	291		332	333	335		379	380	382		429	430	432		464	465	467		507	508	510	
		Lo PR	117	118	121		123	125	128		129	131	134		135	136	139		136	138	141		142	144	147	
75	1390	MBh	53.8	54.6	56.2	58.6	53.3	54.1	55.7	58.2	51.9	52.7	54.3	56.8	49.5	50.3	51.9	54.3	42.0	42.6	44.1	44.7	35.9	36.5	37.8	37.7
		S/T	0.67	0.60	0.47	0.34	0.68	0.61	0.48	0.35	0.70	0.63	0.50	0.37	0.72	0.65	0.52	0.39	0.76	0.69	0.56	0.42	1.00	0.76	0.62	0.48
		ΔT	23	21	18	14	23	21	18	14	23	21	18	15	23	21	18	14	25	23	20	15	23	22	18	15
		kW	4.52	4.51	4.50	4.55	5.14	5.14	5.13	5.18	5.84	5.84	5.83	5.87	6.60	6.59	6.58	6.63	6.09	6.08	6.07	5.76	5.87	5.86	5.86	5.43
		Amps	17.4	17.4	17.3	17.5	20.1	20.1	20.0	20.2	23.1	23.1	23.1	23.3	26.4	26.4	26.3	26.6	24.2	24.2	24.1	22.8	23.2	23.2	23.2	21.4
		Hi PR	282	283	285	290	326	328	330	334	373	374	376	381	423	424	426	431	458	460	461	462	501	502	504	501
		Lo PR	112	114	117	121	119	121	123	128	125	127	129	134	130	132	135	139	132	134	136	141	138	140	143	147
	1640	MBh	54.7	55.4	57.0	59.5	54.2	54.9	56.6	59.0	52.8	53.5	55.1	57.6	50.3	**51.1**	52.7	55.2	42.7	43.4	44.9	45.5	36.6	37.2	38.5	38.3
		S/T	0.74	0.67	0.55	0.41	0.75	0.68	0.55	0.42	0.77	0.70	0.57	0.44	0.79	**0.72**	0.59	0.46	1.00	0.76	0.63	0.50	1.00	0.83	0.70	0.56
		ΔT	21	20	16	13	21	20	16	13	21	20	17	13	21	**19**	16	13	24	22	18	13	22	20	17	14
		kW	4.56	4.55	4.54	4.59	5.18	5.18	5.17	5.22	5.88	5.88	5.87	5.91	6.64	**6.63**	6.62	6.67	6.12	6.11	6.11	5.79	5.89	5.89	5.88	5.46
		Amps	17.6	17.5	17.5	17.7	20.3	20.3	20.2	20.4	23.3	23.3	23.2	23.5	26.6	**26.6**	26.5	26.7	24.3	24.3	24.3	22.9	23.4	23.4	23.3	21.5
		Hi PR	285	286	288	293	329	331	333	337	376	377	379	384	426	**427**	429	434	461	462	464	464	504	505	507	504
		Lo PR	114	116	119	123	121	123	125	130	127	129	131	136	132	**134**	137	141	134	136	138	143	140	142	144	149
	1890	MBh	55.7	56.5	58.1	60.6	55.2	56.0	57.6	60.1	53.8	54.6	56.2	58.7	51.4	52.2	53.8	56.2	43.7	44.4	45.8	46.4	37.4	38.0	39.4	39.1
		S/T	0.78	0.71	0.58	0.45	0.79	0.71	0.59	0.45	0.81	0.74	0.61	0.48	1.00	0.76	0.63	0.50	1.00	0.80	0.67	0.54	1.00	0.87	0.74	0.60
		ΔT	20	19	15	12	20	18	15	12	20	19	16	12	20	18	15	12	22	20	17	12	21	19	16	13
		kW	4.59	4.59	4.58	4.62	5.22	5.21	5.20	5.25	5.91	5.91	5.90	5.95	6.67	6.66	6.65	6.70	6.14	6.14	6.13	5.82	5.92	5.91	5.91	5.48
		Amps	17.7	17.7	17.6	17.8	20.4	20.4	20.4	20.6	23.5	23.4	23.4	23.6	26.7	26.7	26.7	26.9	24.5	24.4	24.4	23.0	23.5	23.4	23.4	21.6
		Hi PR	288	289	291	296	332	333	335	340	379	380	382	387	429	430	432	437	464	465	467	467	507	508	510	507
		Lo PR	117	118	121	126	123	125	128	133	129	131	134	139	135	136	139	144	136	138	141	145	143	144	147	151

IDB = Entering Indoor Dry Bulb Temperature

Shaded area is ACCA (TVA) conditions

kW = Total system power

High and low pressures are measured at the liquid and suction service valves.

Amps = outdoor unit amps (comp.+fan)

Airflow may vary depending on actual ambient conditions and system operation modes.

Expanded Cooling Data — DX6VSS6010A*/ CAPE4961*4A* + DTA119A71 (cont.)

			Outdoor Ambient Temperature																							
			65°F				75°F				85°F				95°F				105°F				115°F			
			Entering Indoor Wet Bulb Temperature																							
IDB	Airflow		59	63	67	71	59	63	67	71	59	63	67	71	59	63	67	71	59	63	67	71	59	63	67	71
80	1390	MBh	54.1	54.9	56.5	58.9	53.6	54.4	56.0	58.4	52.2	53.0	54.6	57.0	49.8	50.5	52.2	54.6	42.2	42.9	44.3	45.0	36.1	36.7	38.0	37.9
		S/T	0.79	0.72	0.59	0.46	0.79	0.72	0.60	0.46	1.00	0.75	0.62	0.49	1.00	0.76	0.64	0.50	1.00	0.81	0.68	0.55	1.00	0.88	0.75	0.61
		ΔT	26	25	21	18	26	25	21	18	27	25	22	18	26	25	21	18	29	27	24	19	27	25	22	19
		kW	4.52	4.52	4.51	4.55	5.15	5.14	5.13	5.18	5.84	5.84	5.83	5.88	6.60	6.59	6.58	6.63	6.09	6.08	6.08	5.76	5.87	5.87	5.86	5.43
		Amps	17.4	17.4	17.3	17.5	20.1	20.1	20.1	20.3	23.2	23.1	23.1	23.3	26.4	26.4	26.4	26.6	24.2	24.2	24.2	22.8	23.3	23.2	23.2	21.4
		Hi PR	282	284	286	290	327	328	330	335	374	375	377	382	424	425	427	432	459	460	462	462	502	503	505	502
		Lo PR	113	114	117	122	120	121	124	129	126	127	130	135	131	132	135	140	133	134	137	142	139	140	143	148
	1640	MBh	54.9	55.7	57.3	59.8	54.5	55.2	56.8	59.3	53.0	53.8	55.4	57.9	50.6	51.4	**53.0**	55.5	43.0	43.7	45.1	45.7	36.8	37.4	38.7	38.5
		S/T	0.86	0.79	0.66	0.53	0.87	0.80	0.67	0.53	1.00	0.82	0.69	0.56	1.00	0.84	**0.71**	0.58	1.00	0.88	0.75	0.62	1.00	0.96	0.82	0.68
		ΔT	25	23	20	17	25	23	20	17	25	24	20	17	25	23	**20**	17	28	26	22	17	26	24	21	18
		kW	4.56	4.56	4.55	4.59	5.19	5.18	5.17	5.22	5.88	5.88	5.87	5.92	6.64	6.63	**6.62**	6.67	6.12	6.12	6.11	5.79	5.90	5.89	5.89	5.46
		Amps	17.6	17.6	17.5	17.7	20.3	20.3	20.2	20.4	23.3	23.3	23.3	23.5	26.6	26.6	**26.5**	26.7	24.4	24.3	24.3	22.9	23.4	23.4	23.3	21.5
		Hi PR	285	287	289	293	330	331	333	338	376	378	380	385	427	428	**430**	435	462	463	465	465	505	506	508	505
		Lo PR	115	116	119	124	122	123	126	131	128	129	132	137	133	134	**137**	142	135	136	139	144	141	142	145	150
	1890	MBh	56.0	56.8	58.4	60.8	55.5	56.3	57.9	60.4	54.1	54.9	56.5	58.9	51.7	52.4	54.1	56.5	43.9	44.6	46.1	46.6	37.7	38.3	39.6	39.4
		S/T	0.90	0.83	0.70	0.56	1.00	0.83	0.70	0.57	1.00	0.85	0.73	0.59	1.00	0.87	0.75	0.61	1.00	0.92	0.79	0.66	1.00	0.99	0.86	0.72
		ΔT	24	22	19	16	24	22	19	16	24	23	19	16	24	22	19	16	27	25	21	16	25	23	20	17
		kW	4.60	4.59	4.58	4.63	5.22	5.22	5.20	5.25	5.92	5.91	5.90	5.95	6.67	6.67	6.66	6.70	6.15	6.14	6.13	5.82	5.92	5.91	5.91	5.48
		Amps	17.7	17.7	17.7	17.9	20.4	20.4	20.4	20.6	23.5	23.4	23.4	23.6	26.7	26.7	26.7	26.9	24.5	24.4	24.4	23.0	23.5	23.5	23.4	21.6
		Hi PR	288	289	291	296	333	334	336	341	379	381	383	387	430	431	433	438	464	466	468	468	507	508	510	507
		Lo PR	117	119	121	126	124	125	128	133	130	131	134	139	135	136	139	144	137	138	141	146	143	144	147	152
85	1390	MBh	55.0	55.8	57.4	59.8	54.5	55.3	56.9	59.4	53.1	53.9	55.5	57.9	50.7	51.4	53.1	55.5	43.0	43.7	45.2	45.8	36.8	37.5	38.8	38.6
		S/T	1.00	0.81	0.69	0.55	1.00	0.82	0.69	0.56	1.00	0.84	0.71	0.58	1.00	0.86	0.73	0.60	1.00	1.00	0.77	0.65	1.00	1.00	0.85	0.71
		ΔT	30	28	25	21	30	28	25	21	30	28	25	22	30	28	25	21	33	31	28	22	31	29	26	22
		kW	4.53	4.53	4.52	4.57	5.16	5.15	5.14	5.19	5.86	5.85	5.84	5.89	6.61	6.61	6.60	6.64	6.10	6.09	6.09	5.77	5.88	5.87	5.87	5.44
		Amps	17.5	17.4	17.4	17.6	20.2	20.1	20.1	20.3	23.2	23.2	23.1	23.3	26.5	26.5	26.4	26.6	24.3	24.2	24.2	22.8	23.3	23.3	23.2	21.4
		Hi PR	284	285	287	292	328	329	331	336	375	376	378	383	425	426	428	433	460	461	463	463	503	504	506	503
		Lo PR	115	116	119	124	121	123	126	130	127	129	132	136	132	134	137	142	134	136	139	143	140	142	145	149
	1640	MBh	55.8	56.6	58.2	60.7	55.4	56.1	57.7	60.2	54.0	54.7	56.3	58.8	51.5	52.3	53.9	56.4	43.8	44.5	45.9	46.5	37.5	38.2	39.5	39.2
		S/T	1.00	0.88	0.76	0.62	1.00	0.89	0.76	0.63	1.00	0.91	0.79	0.65	1.00	1.00	0.80	0.67	1.00	1.00	0.85	0.72	1.00	1.00	0.92	0.78
		ΔT	28	27	24	20	28	27	23	20	29	27	24	20	28	27	23	20	32	30	26	21	29	28	24	21
		kW	4.57	4.57	4.56	4.61	5.20	5.19	5.18	5.23	5.90	5.89	5.88	5.93	6.65	6.65	6.64	6.68	6.13	6.13	6.12	5.80	5.90	5.90	5.89	5.47
		Amps	17.6	17.6	17.6	17.8	20.3	20.3	20.3	20.5	23.4	23.4	23.3	23.5	26.7	26.6	26.6	26.8	24.4	24.4	24.3	23.0	23.4	23.4	23.4	21.5
		Hi PR	287	288	290	295	331	332	334	339	378	379	381	386	428	429	431	436	463	464	466	466	506	507	509	506
		Lo PR	117	118	121	126	123	125	128	132	129	131	134	138	134	136	139	144	136	138	141	145	142	144	147	151
	1890	MBh	56.9	57.7	59.3	61.7	56.4	57.2	58.8	61.3	55.0	55.8	57.4	59.9	52.6	53.4	55.0	57.4	44.7	45.4	46.9	47.4	38.4	39.0	40.3	40.1
		S/T	1.00	0.92	0.79	0.66	1.00	0.93	0.80	0.67	1.00	0.95	0.82	0.69	1.00	1.00	0.84	0.71	1.00	1.00	0.89	0.76	1.00	1.00	0.96	0.82
		ΔT	27	26	22	19	27	26	22	19	28	26	23	19	27	26	22	19	30	29	25	20	28	26	23	20
		kW	4.61	4.60	4.59	4.64	5.23	5.23	5.22	5.26	5.93	5.92	5.91	5.96	6.68	6.68	6.67	6.72	6.16	6.15	6.14	5.83	5.93	5.92	5.92	5.49
		Amps	17.8	17.8	17.7	17.9	20.5	20.5	20.4	20.6	23.5	23.5	23.5	23.7	26.8	26.8	26.7	26.9	24.5	24.5	24.5	23.1	23.5	23.5	23.5	21.6
		Hi PR	289	291	293	298	334	335	337	342	381	382	384	389	431	432	434	439	466	467	469	469	508	510	511	508
		Lo PR	119	120	123	128	126	127	130	135	132	133	136	141	137	138	141	146	139	140	143	147	145	146	149	154

IDB = Entering Indoor Dry Bulb Temperature

Shaded area is AHRI conditions

kW = Total system power

High and low pressures are measured at the liquid and suction service valves.

Amps = outdoor unit amps (comp.+fan)

Airflow may vary depending on actual ambient conditions and system operation modes.

DX6VSS1810A* / DV24FECB14A*
Design Subcooling @ AHRI 95 °F Conditions, 9-11 °F
- 100 % Demand

Outdoor Temp. °F	Total BTU/h	Sensible BTU/h	Latent BTU/h	Total Watts
75°	17,800	13,200	4,600	1,210
80°	17,600	13,300	4,300	1,285
85°	17,400	13,400	4,000	1,360
90°	17,000	13,300	3,700	1,440
95°	**16,600**	**13,100**	**3,500**	**1,520**
100°	16,200	12,900	3,300	1,610
105°	15,700	12,700	3,000	1,700
110°	15,300	12,800	2,500	1,810
115°	14,800	12,900	1,900	1,920
TVA Conditions @ 95° OD DB, 75° ID, 63° ID WB				
95°	**16,000**	**12,800**	**3,200**	**1,520**

DX6VSS1810A* / DV24FECB14A*
Design Subcooling @ AHRI 95 °F Conditions, 9-11 °F
- Boost Mode

Outdoor Temp. °F	Total BTU/h	Sensible BTU/h	Latent BTU/h	Total Watts
75°	18,800	13,600	5,200	1,350
80°	18,600	13,700	4,900	1,500
85°	18,300	13,700	4,600	1,550
90°	17,900	13,600	4,300	1,600
95°	**17,500**	**13,500**	**4,000**	**1,700**
100°	17,000	13,300	3,700	1,800
105°	16,500	13,100	3,400	1,900
110°	16,100	13,200	2,900	2,000
115°	15,600	13,200	2,400	2,150
TVA Conditions @ 95° OD DB, 75° ID, 63° ID WB				
95°	**16,900**	**13,200**	**3,700**	**1,700**

DX6VSS2410A* / DV24FECB14A*
Design Subcooling @ AHRI 95 °F Conditions, 11-13 °F
- 100 % Demand

Outdoor Temp. °F	Total BTU/h	Sensible BTU/h	Latent BTU/h	Total Watts
75°	23,800	17,400	6,400	1,740
80°	23,500	17,500	6,000	1,850
85°	23,200	17,600	5,600	1,960
90°	22,700	17,500	5,200	2,080
95°	**22,200**	**17,300**	**4,900**	**2,200**
100°	21,600	17,100	4,500	2,330
105°	21,000	16,800	4,200	2,460
110°	20,400	16,900	3,500	2,620
115°	19,800	17,000	2,800	2,780
TVA Conditions @ 95° OD DB, 75° ID, 63° ID WB				
95°	**21,400**	**16,900**	**4,500**	**2,200**

DX6VSS2410A* / DV24FECB14A*
Design Subcooling @ AHRI 95 °F Conditions, 11-13 °F
- Boost Mode

Outdoor Temp. °F	Total BTU/h	Sensible BTU/h	Latent BTU/h	Total Watts
75°	25,100	18,000	7,100	1,950
80°	24,800	18,100	6,700	2,100
85°	24,500	18,100	6,400	2,150
90°	24,000	18,000	6,000	2,300
95°	**23,400**	**17,800**	**5,600**	**2,450**
100°	22,800	17,600	5,200	2,600
105°	22,100	17,300	4,800	2,700
110°	21,500	17,400	4,100	2,900
115°	20,900	17,400	3,500	3,050
TVA Conditions @ 95° OD DB, 75° ID, 63° ID WB				
95°	**22,600**	**17,400**	**5,200**	**2,450**

DX6VSS3010A* / DV36FECC14A*
Design Subcooling @ AHRI 95 °F Conditions, 13-15 °F
- 100 % Demand

Outdoor Temp. °F	Total BTU/h	Sensible BTU/h"	Latent BTU/h	Total Watts
75°	29,800	21,800	8,000	2,230
80°	29,500	21,800	7,700	2,370
85°	29,100	21,800	7,300	2,510
90°	28,500	21,600	6,900	2,660
95°	**27,800**	**21,400**	**6,400**	**2,810**
100°	27,000	21,100	5,900	2,975
105°	26,200	20,700	5,500	3,140
110°	25,500	20,800	4,700	3,340
115°	24,800	20,800	4,000	3,540
TVA Conditions @ 95° OD DB, 75° ID, 63° ID WB				
95°	**26,800**	**20,900**	**5,900**	**2,810**

DX6VSS3010A* / DV36FECC14A*
Design Subcooling @ AHRI 95 °F Conditions, 13-15 °F
- Boost Mode

Outdoor Temp. °F	Total BTU/h	Sensible BTU/h"	Latent BTU/h	Total Watts
75°	31,500	22,600	8,900	2,450
80°	31,100	22,700	8,400	2,600
85°	30,700	22,800	7,900	2,750
90°	30,100	22,600	7,500	2,900
95°	**29,400**	**22,400**	**7,000**	**3,100**
100°	28,600	22,100	6,500	3,300
105°	27,800	21,700	6,100	3,450
110°	26,700	21,500	5,200	3,700
115°	25,500	21,200	4,300	3,900
TVA Conditions @ 95° OD DB, 75° ID, 63° ID WB				
95°	**28,400**	**21,800**	**6,600**	**3,100**

DX6VSS3610A* / DV36FECC14A*
Design Subcooling @ AHRI 95 °F Conditions, 14-16 °F - 100 % Demand

Outdoor Temp. °F	Total BTU/h	Sensible BTU/h"	Latent BTU/h	Total Watts
75°	36,000	26,300	9,700	3,070
80°	35,600	26,500	9,100	3,260
85°	35,100	26,700	8,400	3,450
90°	34,400	26,500	7,900	3,655
95°	**33,600**	**26,200**	**7,400**	**3,860**
100°	32,700	25,800	6,900	4,090
105°	31,700	25,400	6,300	4,320
110°	28,900	24,200	4,700	4,565
115°	26,000	22,900	3,100	4,810
TVA Conditions @ 95° OD DB, 75° ID, 63° ID WB				
95°	**32,400**	**25,600**	**6,800**	**3,870**

DX6VSS3610A* / DV36FECC14A*
Design Subcooling @ AHRI 95 °F Conditions, 14-16 °F - Boost Mode

Outdoor Temp. °F	Total BTU/h	Sensible BTU/h"	Latent BTU/h	Total Watts
75°	38,000	27,500	10,500	3,300
80°	37,500	27,700	9,800	3,500
85°	37,000	27,800	9,200	3,750
90°	36,200	27,600	8,600	4,000
95°	**35,400**	**27,300**	**8,100**	**4,200**
100°	34,400	26,900	7,500	4,500
105°	33,400	26,500	6,900	4,700
110°	29,700	24,700	5,000	4,800
115°	26,000	22,800	3,200	4,850
TVA Conditions @ 95° OD DB, 75° ID, 63° ID WB				
95°	**34,100**	**26,600**	**7,500**	**4,200**

DX6VSS4210A* / DV48FECD14A*
Design Subcooling @ AHRI 95 °F Conditions, 7-9 °F - 100 % Demand

Outdoor Temp. °F	Total BTU/h	Sensible BTU/h	Latent BTU/h	Total Watts
75°	42,400	30,100	12,300	3,630
80°	41,900	30,100	11,800	3,875
85°	41,300	30,100	11,200	4,120
90°	40,400	29,900	10,500	4,385
95°	**39,500**	**29,600**	**9,900**	**4,650**
100°	38,400	29,200	9,200	4,945
105°	37,300	28,700	8,600	5,240
110°	34,400	27,100	7,300	5,255
115°	31,400	25,400	6,000	5,270
TVA Conditions @ 95° OD DB, 75° ID, 63° ID WB				
95°	**38,100**	**29,000**	**9,100**	**4,650**

DX6VSS4210A* / DV48FECD14A*
Design Subcooling @ AHRI 95 °F Conditions, 7-9 °F - Boost Mode

Outdoor Temp. °F	Total BTU/h	Sensible BTU/h	Latent BTU/h	Total Watts
75°	44,500	30,600	13,900	3,900
80°	44,000	30,800	13,200	4,200
85°	43,400	30,900	12,500	4,400
90°	42,500	30,600	11,900	4,700
95°	**41,500**	**30,300**	**11,200**	**4,950**
100°	39,400	29,200	10,200	5,300
105°	37,300	28,000	9,300	5,600
110°	34,400	26,800	7,600	5,500
115°	31,400	25,500	5,900	5,300
TVA Conditions @ 95° OD DB, 75° ID, 63° ID WB				
95°	**40,000**	**29,600**	**10,400**	**4,950**

DX6VSS4810A* / DV48FECD14A*
Design Subcooling @ AHRI 95 °F Conditions, 8-10 °F - 100 % Demand

Outdoor Temp. °F	Total BTU/h	Sensible BTU/h	Latent BTU/h	Total Watts
75°	48,300	33,300	15,000	4,380
80°	47,700	33,400	14,300	4,680
85°	47,100	33,400	13,700	4,980
90°	46,100	33,200	12,900	5,300
95°	**45,000**	**32,900**	**12,100**	**5,620**
100°	42,800	31,700	11,100	5,985
105°	40,500	30,400	10,100	6,350
110°	36,600	28,300	8,300	5,855
115°	32,600	26,100	6,500	5,360
TVA Conditions @ 95° OD DB, 75° ID, 63° ID WB				
95°	**43,400**	**32,100**	**11,300**	**5,630**

DX6VSS4810A* / DV48FECD14A*
Design Subcooling @ AHRI 95 °F Conditions, 8-10 °F - Boost Mode

Outdoor Temp. °F	Total BTU/h	Sensible BTU/h	Latent BTU/h	Total Watts
75°	50,900	33,600	17,300	4,750
80°	50,300	33,800	16,500	5,100
85°	49,700	33,900	15,800	5,400
90°	48,100	33,300	14,800	5,800
95°	**46,500**	**32,600**	**13,900**	**6,100**
100°	43,500	31,500	12,000	6,200
105°	40,500	30,400	10,100	6,350
110°	36,600	28,300	8,300	5,900
115°	32,600	26,100	6,500	5,400
TVA Conditions @ 95° OD DB, 75° ID, 63° ID WB				
95°	**44,900**	**31,900**	**13,000**	**6,100**

DX6VSS6010A* / DV60FECD14A* Design Subcooling @ AHRI 95 °F Conditions, 8-10 °F - 100 % Demand				
Outdoor Temp. °F	Total BTU/h	Sensible BTU/h	Latent BTU/h	Total Watts
75°	56,800	38,100	18,700	5,170
80°	56,100	38,200	17,900	5,520
85°	55,400	38,200	17,200	5,870
90°	54,200	37,900	16,300	6,245
95°	**53,000**	**37,600**	**15,400**	**6,620**
100°	49,100	35,700	13,400	6,325
105°	45,100	33,800	11,300	6,030
110°	40,000	30,900	9,100	5,900
115°	34,900	27,900	7,000	5,770
TVA Conditions @ 95° OD DB, 75° ID, 63° ID WB				
95°	**51,100**	**36,800**	**14,300**	**6,630**

DX6VSS6010A* / DV60FECD14A* Design Subcooling @ AHRI 95 °F Conditions, 8-10 °F - Boost Mode				
Outdoor Temp. °F	Total BTU/h	Sensible BTU/h	Latent BTU/h	Total Watts
75°	59,500	39,200	20,300	5,800
80°	58,800	39,400	19,400	6,200
85°	58,000	39,600	18,400	6,600
90°	56,800	39,300	17,500	7,000
95°	**55,500**	**38,900**	**16,600**	**7,450**
100°	50,300	36,400	13,900	6,800
105°	45,100	33,900	11,200	6,050
110°	40,000	30,900	9,100	5,900
115°	34,900	27,900	7,000	5,800
TVA Conditions @ 95° OD DB, 75° ID, 63° ID WB				
95°	**53,500**	**38,000**	**15,500**	**7,450**

DX6VSA181WA* / DV24FECB14A* Design Subcooling @ AHRI 95 °F Conditions, 9-11 °F - 100 % Demand				
Outdoor Temp. °F	Total BTU/h	Sensible BTU/h	Latent BTU/h	Total Watts
75°	17,800	13,200	4,600	1,210
80°	17,600	13,300	4,300	1,285
85°	17,400	13,400	4,000	1,360
90°	17,000	13,300	3,700	1,440
95°	**16,600**	**13,100**	**3,500**	**1,520**
100°	16,200	12,900	3,300	1,610
105°	15,700	12,700	3,000	1,700
110°	15,300	12,800	2,500	1,810
115°	14,800	12,900	1,900	1,920
TVA Conditions @ 95° OD DB, 75° ID, 63° ID WB				
95°	**16,000**	**12,800**	**3,200**	**1,520**

DX6VSA181WA* / DV24FECB14A* Design Subcooling @ AHRI 95 °F Conditions, 9-11 °F - Boost Mode				
Outdoor Temp. °F	Total BTU/h	Sensible BTU/h	Latent BTU/h	Total Watts
75°	18,800	13,600	5,200	1,350
80°	18,600	13,700	4,900	1,500
85°	18,300	13,700	4,600	1,550
90°	17,900	13,600	4,300	1,600
95°	**17,500**	**13,500**	**4,000**	**1,700**
100°	17,000	13,300	3,700	1,800
105°	16,500	13,100	3,400	1,900
110°	16,100	13,200	2,900	2,000
115°	15,600	13,200	2,400	2,150
TVA Conditions @ 95° OD DB, 75° ID, 63° ID WB				
95°	**16,900**	**13,200**	**3,700**	**1,700**

DX6VSA241WA* / DV24FECB14A* Design Subcooling @ AHRI 95 °F Conditions, 11-13 °F - 100 % Demand				
Outdoor Temp. °F	Total BTU/h	Sensible BTU/h	Latent BTU/h	Total Watts
75°	23,800	17,400	6,400	1,740
80°	23,500	17,500	6,000	1,850
85°	23,200	17,600	5,600	1,960
90°	22,700	17,500	5,200	2,080
95°	**22,200**	**17,300**	**4,900**	**2,200**
100°	21,600	17,100	4,500	2,330
105°	21,000	16,800	4,200	2,460
110°	20,400	16,900	3,500	2,620
115°	19,800	17,000	2,800	2,780
TVA Conditions @ 95° OD DB, 75° ID, 63° ID WB				
95°	**21,400**	**16,900**	**4,500**	**2,200**

DX6VSA241WA* / DV24FECB14A* Design Subcooling @ AHRI 95 °F Conditions, 11-13 °F - Boost Mode				
Outdoor Temp. °F	Total BTU/h	Sensible BTU/h	Latent BTU/h	Total Watts
75°	25,100	18,000	7,100	1,950
80°	24,800	18,100	6,700	2,100
85°	24,500	18,100	6,400	2,150
90°	24,000	18,000	6,000	2,300
95°	**23,400**	**17,800**	**5,600**	**2,450**
100°	22,800	17,600	5,200	2,600
105°	22,100	17,300	4,800	2,700
110°	21,500	17,400	4,100	2,900
115°	20,900	17,400	3,500	3,050
TVA Conditions @ 95° OD DB, 75° ID, 63° ID WB				
95°	**22,600**	**17,400**	**5,200**	**2,450**

DX6VSA301WA* / DV36FECC14A* Design Subcooling @ AHRI 95 °F Conditions, 13-15 °F - 100 % Demand				
Outdoor Temp. °F	**Total BTU/h**	**Sensible BTU/h**	**Latent BTU/h**	**Total Watts**
75°	29,800	21,800	8,000	2,230
80°	29,500	21,800	7,700	2,370
85°	29,100	21,800	7,300	2,510
90°	28,500	21,600	6,900	2,660
95°	**27,800**	**21,400**	**6,400**	**2,810**
100°	27,000	21,100	5,900	2,975
105°	26,200	20,700	5,500	3,140
110°	25,500	20,800	4,700	3,340
115°	24,800	20,800	4,000	3,540
TVA Conditions @ 95° OD DB, 75° ID, 63° ID WB				
95°	**26,800**	**20,900**	**5,900**	**2,810**

DX6VSA301WA* / DV36FECC14A* Design Subcooling @ AHRI 95 °F Conditions, 13-15 °F - Boost Mode				
Outdoor Temp. °F	**Total BTU/h**	**Sensible BTU/h**	**Latent BTU/h**	**Total Watts**
75°	31,500	22,600	8,900	2,450
80°	31,100	22,700	8,400	2,600
85°	30,700	22,800	7,900	2,750
90°	30,100	22,600	7,500	2,900
95°	**29,400**	**22,400**	**7,000**	**3,100**
100°	28,600	22,100	6,500	3,300
105°	27,800	21,700	6,100	3,450
110°	26,700	21,500	5,200	3,700
115°	25,500	21,200	4,300	3,900
TVA Conditions @ 95° OD DB, 75° ID, 63° ID WB				
95°	**28,400**	**21,800**	**6,600**	**3,100**

DX6VSA361WA* / CAPEA3026*4A* + MBVC1600**-1A* Design Subcooling @ AHRI 95 °F Conitions, 12-14 °F - 100 % Demand				
Outdoor Temp. °F	**Total BTU/h**	**Sensible BTU/h**	**Latent BTU/h**	**Total Watts**
75°	34,700	24,600	10,100	2,610
80°	34,300	24,700	9,600	2,780
85°	33,900	24,700	9,200	2,950
90°	33,200	24,500	8,700	3,130
95°	**32,400**	**24,300**	**8,100**	**3,310**
100°	31,500	24,000	7,500	3,510
105°	30,600	23,600	7,000	3,710
110°	28,000	22,200	5,800	3,945
115°	25,400	20,800	4,600	4,180
TVA Conditions @ 95° OD DB, 75° ID, 63° ID WB				
95°	**31,200**	**23,700**	**7,500**	**3,310**

DX6VSA361WA* / CAPEA3026*4A* + MBVC1600**-1A* Design Subcooling @ AHRI 95 °F Conditions, 12-14 °F - Boost Mode				
Outdoor Temp. °F	**Total BTU/h**	**Sensible BTU/h**	**Latent BTU/h**	**Total Watts**
75°	38,000	26,800	11,200	3,050
80°	37,500	27,000	10,500	3,300
85°	37,000	27,100	9,900	3,450
90°	36,200	26,900	9,300	3,700
95°	**35,400**	**26,600**	**8,800**	**3,900**
100°	34,400	26,200	8,200	4,100
105°	33,400	25,800	7,600	4,350
110°	29,400	23,400	6,000	4,300
115°	25,400	20,900	4,500	4,200
TVA Conditions @ 95° OD DB, 75° ID, 63° ID WB				
95°	**34,100**	**26,000**	**8,100**	**3,900**

Normal mode		Sound Power Level[1]						
Tonnage	Total Unit Sound Rating (dBA)	Octave Band Spectrum Frequency (Hz) Analysis (dB)						
		125	250	500	1000	2000	4000	8000
1.5-ton	66	52.1	60.1	61.5	59.7	55.2	48.6	47.7
2-ton	67	57.5	59.2	62.4	60.9	56.6	51.1	45.9
2.5-ton	68	56.0	60.2	63.0	62.8	58.0	54.4	46.3
3-ton	68	57.2	59.2	63.2	62.6	58.9	53.6	45.3
3.5-ton	72	58.4	62.7	65.2	68.0	63.7	60.7	48.2
4-ton	72	58.8	62.7	65.0	68.0	64.4	59.9	48.5
5-ton	74	60.0	66.2	67.0	69.8	66.1	60.0	53.5

[1]Compliant with ISO3744.

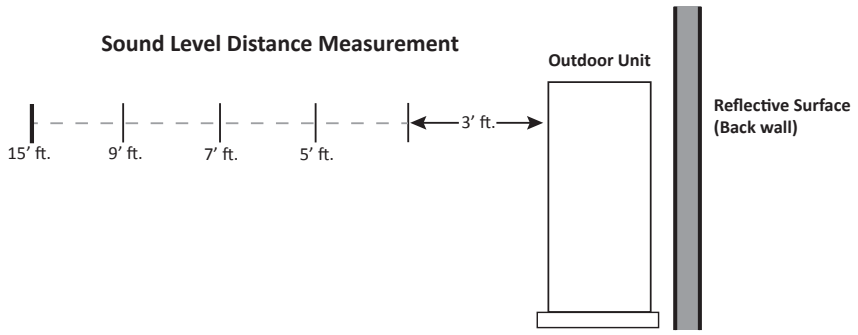

		Sound Pressure (dBA) Cooling Mode[1]				
		Distance From Property Line				
Tonnage	**Reflective Surface Qty.**	**3'**	**5'**	**7'**	**9'**	**15'**
1.5-ton	0	59	54	51	49	45
	1	62	57	54	52	48
	2	65	60	57	55	51
2-ton	0	60	55	52	50	46
	1	63	58	55	53	49
	2	66	61	58	56	52
2.5-ton	0	61	56	53	51	47
	1	64	59	56	54	50
	2	67	62	59	57	53
3-ton	0	61	56	53	51	47
	1	64	59	56	54	50
	2	67	62	59	57	53
3.5-ton	0	65	60	57	55	51
	1	68	63	60	58	54
	2	71	66	63	61	57
4-ton	0	65	60	57	55	51
	1	68	63	60	58	54
	2	71	66	63	61	57
5-ton	0	67	62	59	57	53
	1	70	65	62	60	56
	2	73	68	65	63	59

[1] Compliant with AHRI 275 utilizing standard mode, total sound levels

Quiet mode

Tonnage	Sound suppression level	Sound Power Level (dBA)[1]	Sound Pressure Level (dBA)[2]
1.5-ton	LV.1	63	46
	LV.2	60	43
	LV.3	57	40
2-ton	LV.1	64	47
	LV.2	61	44
	LV.3	58	41
2.5-ton	LV.1	65	51
	LV.2	62	48
	LV.3	59	45
3-ton	LV.1	65	51
	LV.2	62	48
	LV.3	59	45
3.5-ton	LV.1	67	55
	LV.2	62	50
	LV.3	57	45
4-ton	LV.1	67	55
	LV.2	62	50
	LV.3	57	45
5-ton	LV.1	68	55
	LV.2	63	50
	LV.3	58	45

[1]Compliant with ISO3744.

[2]Compliant with JIS B 8616 : 2006.

All AHRI system ratings are accessible in the Unitary Matchup Tool via Daikin City or in the Daikin System Configurator tool via PartnerLink.

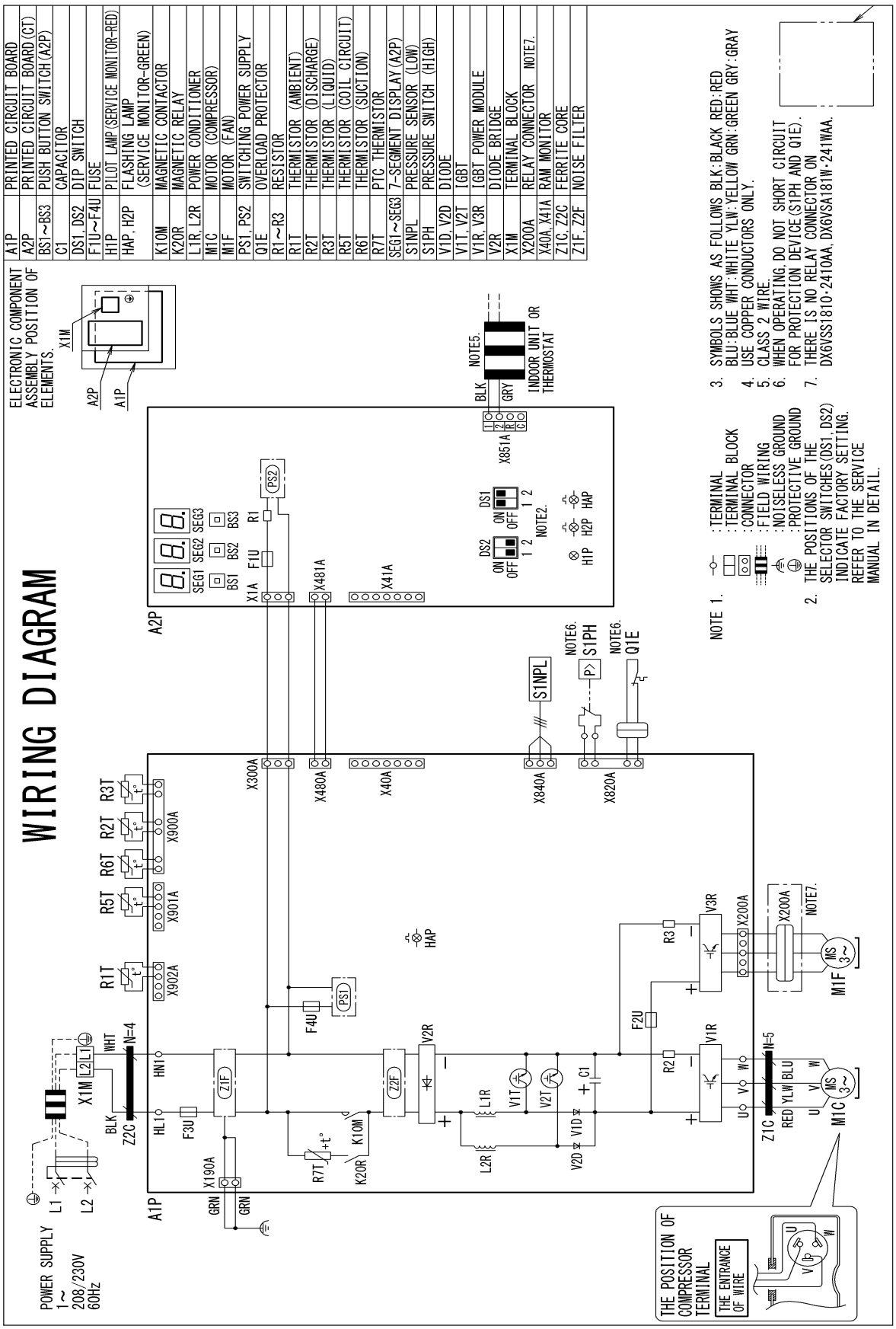

WARNING

High Voltage: Disconnect all power before servicing or installing this unit. Multiple power sources may be present. Failure to do so may cause property damage, personal injury, or death.

Wiring is subject to change. Always refer to the wiring diagram on the unit for the most up-to-date wiring.

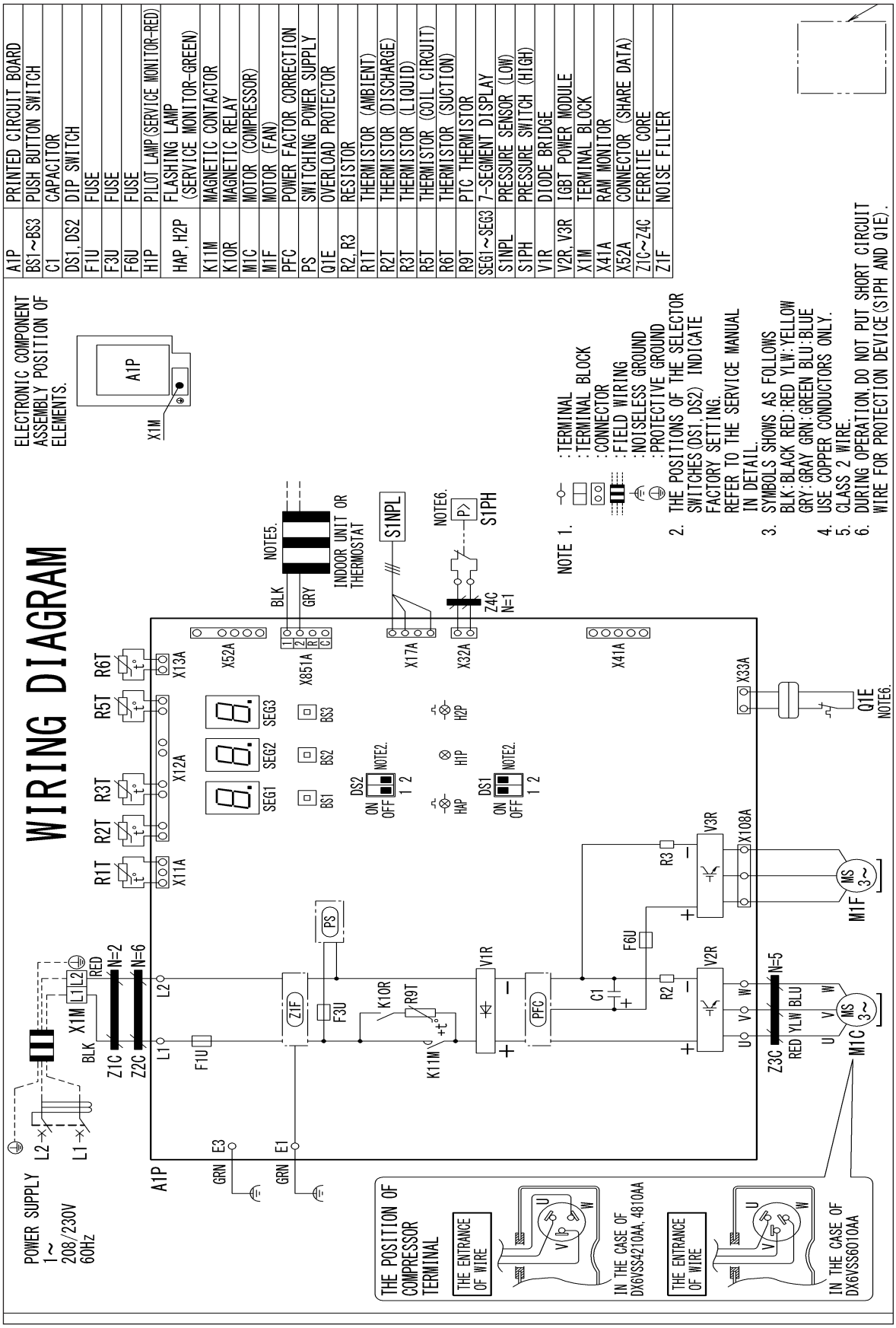

WARNING

High Voltage: Disconnect all power before servicing or installing this unit. Multiple power sources may be present. Failure to do so may cause property damage, personal injury, or death.

Wiring is subject to change. Always refer to the wiring diagram on the unit for the most up-to-date wiring.

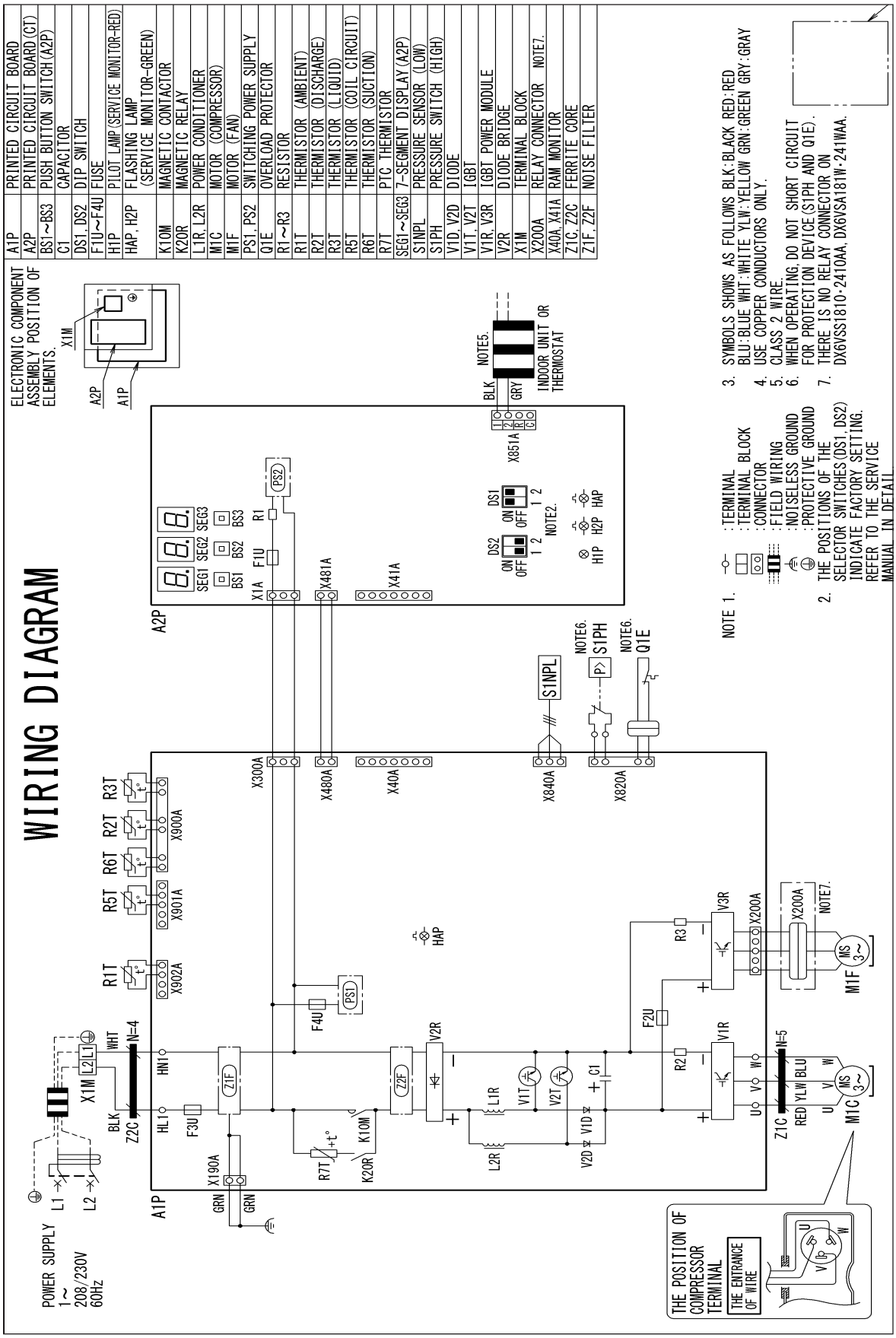

WARNING

High Voltage: Disconnect all power before servicing or installing this unit. Multiple power sources may be present. Failure to do so may cause property damage, personal injury, or death.

Wiring is subject to change. Always refer to the wiring diagram on the unit for the most up-to-date wiring.

Model	Dimensions		
	W"	D"	H"
DX6VSS1810A*/ DX6VSA181WA*	36⅝	13¾	27⅜
DX6VSS2410A*/ DX6VSA241WA*	36⅝	13¾	27⅜
DX6VSS3010A*/ DX6VSA301WA*	36⅝	13¾	27⅜
DX6VSS3610A*/ DX6VSA361WA*	36⅝	13¾	27⅜

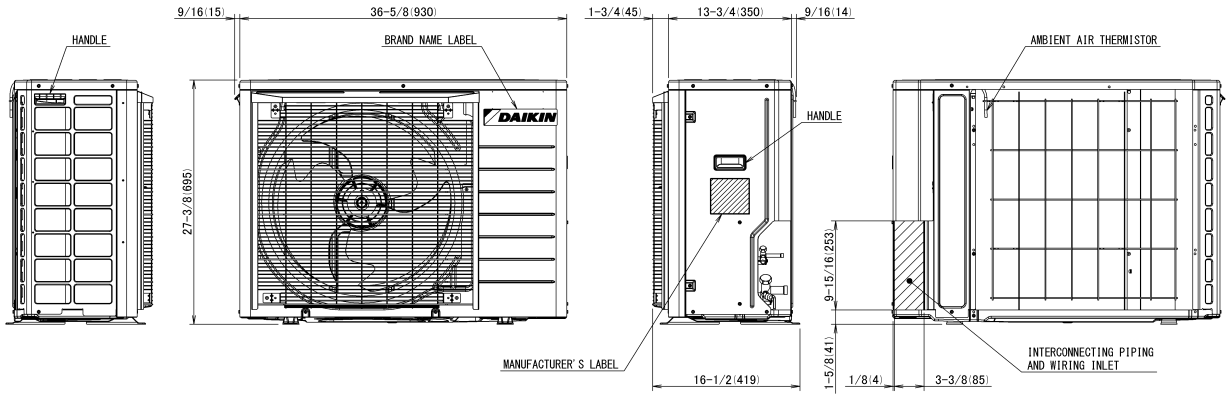

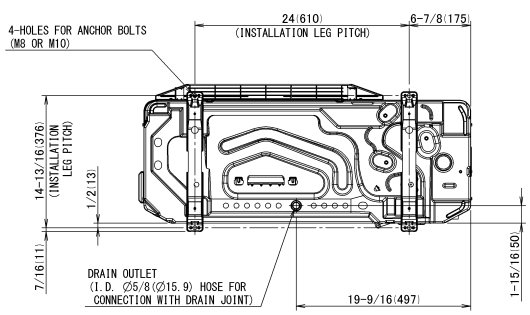

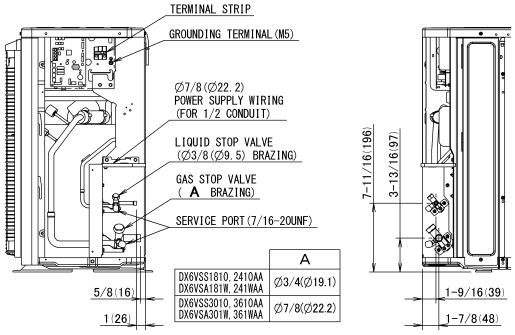

UNIT:inch(mm)

MODEL	DIMENSIONS		
	W"	D"	H"
DX6VSS4210A*	37	12⅝	39
DX6VSS4810A*	37	12⅝	39
DX6VSS6010A*	37	12⅝	39

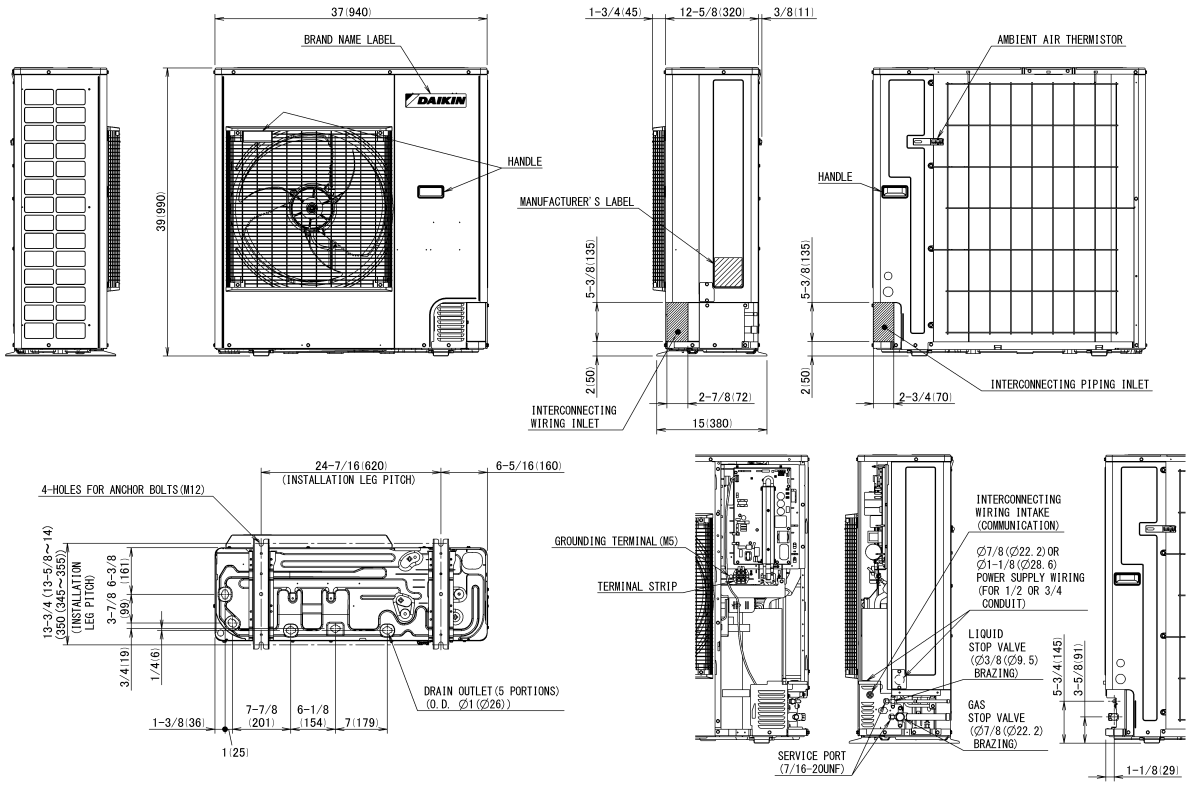

Model	Description	DX6VSS 1810A*	DX6VSS 2410A*	DX6VSS 3010A*	DX6VSS 3610A*	DX6VSS 4210A*	DX6VSS 4810A*	DX6VSS 6010A*	DX6VSA 181WA*	DX6VSA 241WA*	DX6VSA 301WA*	DX6VSA 361WA*
KPW5G112	Air Adjustment Grill/Wind Baffle	X	X	X	X	X	X	X	X	X	X	X
130-DK-006	Hail Guard	X	X	X					X	X	X	X
130-DK-008	Hail Guard					X	X	X				
DACA-WB-3	Powder Coated Wall-Mounted Bracket	X	X	X	X	X	X	X	X	X	X	X
DSEN-HAQA	Daikin One Home Air Monitor	X	X	X	X	X	X	X	X	X	X	X
DQ-P-16-100	Daikin One Powered Ventilator	X	X	X	X	X	X	X	X	X	X	X
DTA119A71	D24V Gateway	X	X	X	X	X	X	X				

Our continuing commitment to quality products may mean a change in specifications without notice.
©2023 **DAIKIN COMFORT TECHNOLOGIES MANUFACTURING, L.P.** • Houston, Texas • Printed in the USA.