DAQ COMMERCIAL

ELECTRIC AIR HANDLERS
FOR 7½ & 10-TON SPLIT SYSTEMS

Contents

Nomenclature 2
Product Specifications 3
Airflow Data 4
Temperature Rise 6
Electrical Heater Kits.....7
Dimensions.....8
Wiring Diagrams 9
Accessories 11

R32

Standard Features

- TXV Control; Units have two (2) thermal expansion valves
- DAQ units feature two 5-speed direct-drive motors
- Copper tube/aluminum fin coils
- AHRI Certified; ETL Listed
- R-32 leak mitigation system

Cabinet Features

- Heavy-gauge, reinforced, galvanized-steel cabinet
- Fully insulated with fiberglass blanket
- Horizontal and vertical condensate pans
- Built-in filter rack (2" filter included)
- Entry on top of panel for both low and high voltage
- Removable access panels make servicing of unit faster and easier

5 YEAR PARTS WARRANTY*

* Complete warranty details available from your local dealer or at www.daikincomfort.com.

D	A	Q	120	3	4	A
1	2	3	4,5,6	7	8	9

Brand

D - Daikin

Product Type

A - Single-Piece Air Handler

Unit Applicationon

Q - Multi-Position, 5-Speed Direct-Drive Motor

Engineering*

Major/Minor Revisions

*Not used for inventory management

Electrical

3 - 208/230 V Three-Phase 60 Hz

4 - 460 V Three-Phase 60 Hz

Refrigerant

3 - R-32

Nominal Capacity Range

090 - 7½ tons

120 - 10 tons

	DAQ09033**	DAQ09034**	DAQ12033**	DAQ12034**
TOTAL CAPACITIES				
Nominal Cooling (Tons) [1]	7.5	7.5	10	10
Heating (kW)	15, 20, 30	15, 20, 30	15, 20, 30	15, 20, 30
ELECTRICAL DATA				
Voltage-Hz-Phase	208/230-60-3	460-60-3	208/230-60-3	460-60-3
Voltage Range	197 - 253	414-506	197 - 253	414-506
FLA (Total)	13.8	4.6	13.8	4.6
Minimum Circuit Ampacity	15.5/15.5	5.2	15.5/15.5	5.2
BLOWER MOTOR				
Type	Direct-Drive	Direct-Drive	Direct-Drive	Direct-Drive
Horse Power	1	1	1	1
Voltage-Hz-Phase	208/230-60-3	460-60-3	208/230-60-3	460-60-3
FLA/ LRA	6.9/47.7	2.3/23.9	6.9/47.7	2.3/23.9
BLOWER & CONTROLS				
Wheel Dia. & Width (Qty.)	11 x 10 (2)	11 x 10 (2)	11 x 10 (2)	11 x 10 (2)
Nominal Airflow (Ft./Min.)	3,000	3,000	4,000	4,000
Transformer	Standard	Standard	Standard	Standard
Blower Relay	Standard	Standard	Standard	Standard
FILTER, COIL & REFRIGERANT				
Disposable Filter Size / Qty	16”x20”x2”/ 2 20”x20”x2”/ 2	16”x20”x2”/ 2 20”x20”x2”/ 2	16”x20”x2”/ 2 20”x20”x2”/ 2	16”x20”x2”/ 2 20”x20”x2”/ 2
Coil Area (sq. ft.)	10	10	10	10
FPI - Rows	14 - 4	14 - 4	14 - 4	14 - 4
Expansion Valve Qty.	2	2	2	2
Refrigerant	R-32	R-32	R-32	R-32
Liquid Connection (Qty.)	⅜” (2) *	⅜” (2) *	⅜” (2) *	⅜” (2) *
Suction Connection (Qty.)	1⅛” (2)	1⅛” (2)	1⅛” (2)	1⅛” (2)
Condensate Drain	¾ FPT	¾ FPT	¾ FPT	¾ FPT
SHIP WEIGHT (LBS)	430	430	430	430

* For two refrigerant lines

BLOWER PERFORMANCE TABLES • 7.5 Ton LC Indoor Split System • Models: DAQ09033, DAQ09034

*UP-FLOW				
SPEED TAP	ESP (IN H_2O)	SCFM	RPM	SINGLE FAN BHP
T1	0.1	1,941	536	0.09
	0.2	1,794	587	0.10
	0.3	1,627	638	0.11
	0.4	1,446	687	0.12
	0.5	1,256	734	0.13
	0.6	1,078	781	0.14
	0.7			
	0.8			
T2	0.1	3,079	727	0.28
	0.2	2,985	764	0.29
	0.3	2,877	801	0.30
	0.4	2,761	838	0.32
	0.5	2,642	875	0.33
	0.6	2,525	912	0.35
	0.7	2,406	948	0.36
	0.8	2,287	983	0.37
T3	0.1	3,079	727	0.28
	0.2	2,985	764	0.29
	0.3	2,877	801	0.30
	0.4	2,761	838	0.32
	0.5	2,642	875	0.33
	0.6	2,525	912	0.35
	0.7	2,406	948	0.36
	0.8	2,287	983	0.37
T4	0.1	3,565	819	0.39
	0.2	3,500	845	0.40
	0.3	3,425	871	0.41
	0.4	3,348	899	0.43
	0.5	3,253	927	0.44
	0.6	3,153	958	0.46
	0.7	3,037	990	0.47
	0.8	2,917	1,025	0.49
T5	0.1	3,789	852	0.47
	0.2	3,717	881	0.49
	0.3	3,634	909	0.50
	0.4	3,548	938	0.52
	0.5	3,452	967	0.53
	0.6	3,350	997	0.55
	0.7	3,242	1,028	0.57
	0.8	3,128	1,060	0.58

*HORIZONTAL FLOW				
SPEED TAP	ESP (IN H2O)	SCFM	RPM	SINGLE FAN BHP
T1	0.1	2,105	507	0.09
	0.2	1,898	563	0.10
	0.3	1,692	616	0.11
	0.4	1,494	668	0.12
	0.5	1,314	720	0.13
	0.6	1,140	770	0.13
	0.7			
	0.8			
T2	0.1	3,094	700	0.27
	0.2	3,034	746	0.28
	0.3	2,951	785	0.30
	0.4	2,854	820	0.31
	0.5	2,745	853	0.32
	0.6	2,621	885	0.34
	0.7	2,498	919	0.35
	0.8	2,357	953	0.36
T3	0.1	3,094	700	0.27
	0.2	3,034	746	0.28
	0.3	2,951	785	0.30
	0.4	2,854	820	0.31
	0.5	2,745	853	0.32
	0.6	2,621	885	0.34
	0.7	2,498	919	0.35
	0.8	2,357	953	0.36
T4	0.1	3,493	776	0.37
	0.2	3,410	814	0.39
	0.3	3,324	848	0.40
	0.4	3,224	878	0.42
	0.5	3,127	908	0.43
	0.6	3,015	937	0.45
	0.7	2,899	967	0.46
	0.8	2,773	998	0.47
T5	0.1	3,815	832	0.46
	0.2	3,734	866	0.48
	0.3	3,649	896	0.49
	0.4	3,562	924	0.51
	0.5	3,471	951	0.52
	0.6	3,373	978	0.54
	0.7	3,272	1,006	0.55
	0.8	3,162	1,035	0.57

*Above table is for dry coil with filter in place. SCFM correction for wet coil results in 4%reduction.

NOTES:

- Any adjustment made to the blower should not cause the motor to draw more than the motors rated RLA.
- Applications that exceed the above could require a larger motor.

BLOWER PERFORMANCE TABLES • 10 Ton LC Indoor Split System • Models: DAQ12033, DAQ12034

UP FLOW				
SPEED TAP	ESP (IN H_20)	SCFM	RPM	BHP
T1	0.1	2,525	622	0.17
	0.2	2,400	666	0.18
	0.3	2,269	710	0.19
	0.4	2,132	753	0.20
	0.5	1,984	794	0.21
	0.6	1,843	835	0.22
	0.7	1,706	875	0.24
	0.8	1,565	913	0.25
T2	0.1	4,012	890	0.56
	0.2	3,930	921	0.58
	0.3	3,841	950	0.59
	0.4	3,752	979	0.61
	0.5	3,658	1,007	0.63
	0.6	3,566	1,036	0.65
	0.7	3,463	1,064	0.66
	0.8	3,360	1,093	0.68
T3	0.1	4,012	890	0.56
	0.2	3,930	921	0.58
	0.3	3,841	950	0.59
	0.4	3,752	979	0.61
	0.5	3,658	1,007	0.63
	0.6	3,566	1,036	0.65
	0.7	3,463	1,064	0.66
	0.8	3,360	1,093	0.68
T4	0.1	4,482	973	0.74
	0.2	4,387	997	0.76
	0.3	4,299	1,021	0.78
	0.4	4,218	1,045	0.79
	0.5	4,141	1,069	0.81
	0.6	4,066	1,093	0.83
	0.7	3,992	1,117	0.85
	0.8	3,916	1,141	0.87
T5	0.1	4,588	1,003	0.81
	0.2	4,510	1,033	0.83
	0.3	4,441	1,060	0.86
	0.4	4,372	1,084	0.88
	0.5	4,301	1,106	0.89
	0.6	4,244	1,129	0.91
	0.7	4,179	1,151	0.93
	0.8	4,108	1,173	0.95

HORIZONTAL FLOW				
SPEED TAP	ESP	SCFM	RPM	BHP
T1	0.1	2,581	619	0.17
	0.2	2,468	660	0.18
	0.3	2,340	703	0.19
	0.4	2,204	747	0.20
	0.5	2,061	791	0.21
	0.6	1,904	834	0.22
	0.7	1,740	876	0.24
	0.8	1,603	919	0.25
T2	0.1	4,134	881	0.55
	0.2	4,061	912	0.57
	0.3	3,989	940	0.59
	0.4	3,915	966	0.60
	0.5	3,835	991	0.62
	0.6	3,760	1,017	0.64
	0.7	3,671	1,043	0.65
	0.8	3,587	1,071	0.67
T3	0.1	4,134	881	0.55
	0.2	4,061	912	0.57
	0.3	3,989	940	0.59
	0.4	3,915	966	0.60
	0.5	3,835	991	0.62
	0.6	3,760	1,017	0.64
	0.7	3,671	1,043	0.65
	0.8	3,587	1,071	0.67
T4	0.1	4,530	955	0.73
	0.2	4,454	982	0.75
	0.3	4,377	1,008	0.77
	0.4	4,299	1,033	0.79
	0.5	4,219	1,057	0.80
	0.6	4,142	1,081	0.82
	0.7	4,062	1,104	0.84
	0.8	3,982	1,127	0.86
T5	0.1	4,649	976	0.79
	0.2	4,574	1,004	0.81
	0.3	4,495	1,030	0.83
	0.4	4,417	1,055	0.85
	0.5	4,339	1,079	0.87
	0.6	4,267	1,103	0.89
	0.7	4,193	1,126	0.91
	0.8	4,123	1,149	0.93

*Above table is for dry coil with filter in place. SCFM correction for wet coil results in 4% reduction.

Model	Heat Kit kW	CFM	Supply Voltage		
			208	240	480
DAQ0904**	15	2,800	12	16	16
		2,900	12	16	16
		3,000	11	15	15
		3,100	11	15	15
		3,200	10	14	14
	20	2,800	16	22	22
		2,900	16	21	21
		3,000	16	21	21
		3,100	16	20	20
		3,200	15	20	20
	30	2,800	24	32	32
		2,900	23	31	31
		3,000	23	30	30
		3,100	21	29	29
		3,200	21	29	29

Model	Heat Kit kW	CFM	Supply Voltage		
			208	240	480
DAQ1204**	15	3,800	9	12	12
		3,900	9	12	12
		4,000	9	12	12
		4,100	9	12	12
		4,200	8	11	11
	20	3,800	12	17	17
		3,900	12	16	16
		4,000	12	16	16
		4,100	12	15	15
		4,200	11	15	15
	30	3,800	19	25	25
		3,900	18	24	24
		4,000	18	24	24
		4,100	17	23	23
		4,200	17	23	23

NOTES:

1. Above table are calculated with both stages of electric heat engaged (2-stage heat systems). Divide the temperature rise from the table by 2 for 1st stage operation for systems using staged electric heat.
2. Temperature rise data are in Degrees Fahrenheit.

Air Handler	AHKD Model	Nominal kW	Electrical Data	Stages	Weight (lbs.)	MCA[1]	MOP[2]
DAQ0903** and DAQ1203**	None	N/A	208-230/3/60	N/A	N/A	15.5 / 15.5	20 / 20
	AHKD15-3A	15	208-240/3/60	1	56	54.8-60.6	60 / 70
	AHKD20-3A	20	208-240/3/60	2	59	67.3-75.0	70 / 80
	AHKD30-3A	30	208-240/3/60	2	60	92.3-104	100 / 110
	None	N/A	460/3/60	N/A	N/A	5.2	15
	AHKD15-4A	15	480/3/60	1	55	27.4	30
	AHKD20-4A	20	480/3/60	2	57	34.6	35
	AHKD30-4A	30	480/3/60	2	58	49.1	50

[1] Minimum Circuit Ampacity
[2] Maximum Overcurrent Protection

NOTES:

- These air handlers do not have factory-installed electric heat. The above-listed kits are the ONLY heater kits that can be used with this commercial series. They are available for purchase as field-installed accessories.
- The electrical characteristics of the air handler, electric heater kits, and building power supply must be compatible.

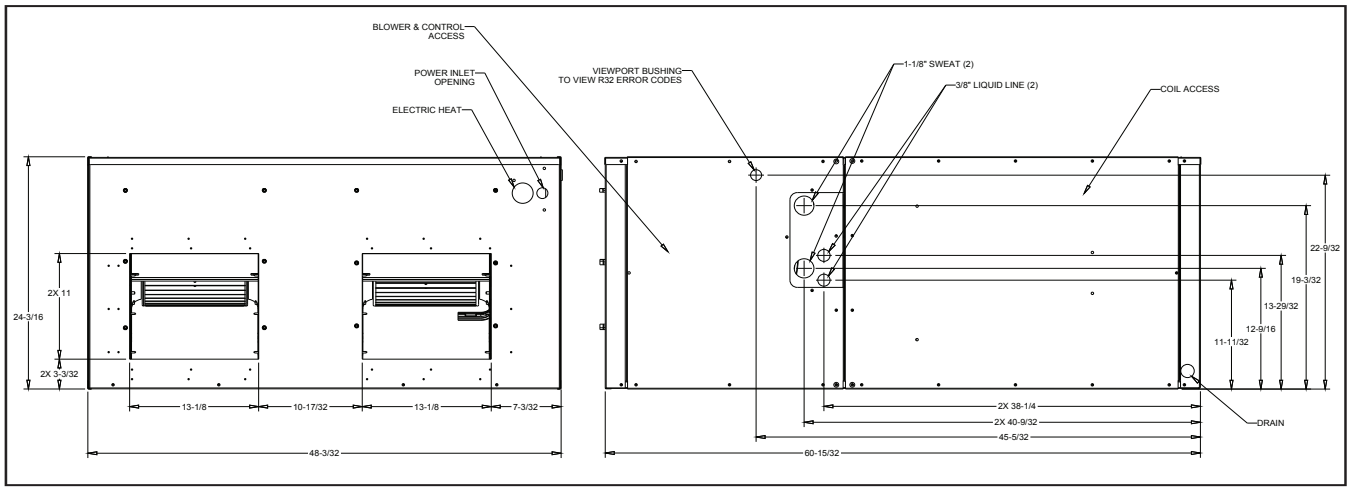

DUCT CONNECTION SIZING WITHOUT ELECTRIC HEATERS

MINIMUM SUPPLY AND RETURN DUCT DIMENSIONS

DIMENSIONAL DATA FOR ELECTRIC HEATER KITS

- 15, 20, & 30 kW Heater Kits
- Supply opening is 13⅞” x 40⅛”

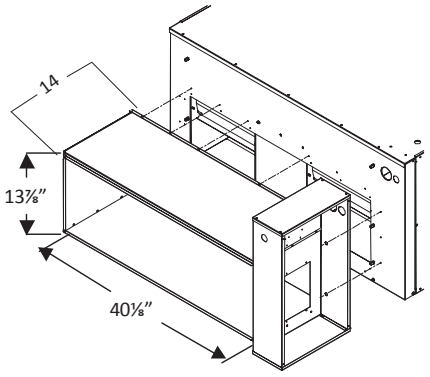

SUPPLY DUCT		RETURN DUCT	
A	B	C	D
13⅛”	40”	24”	48”

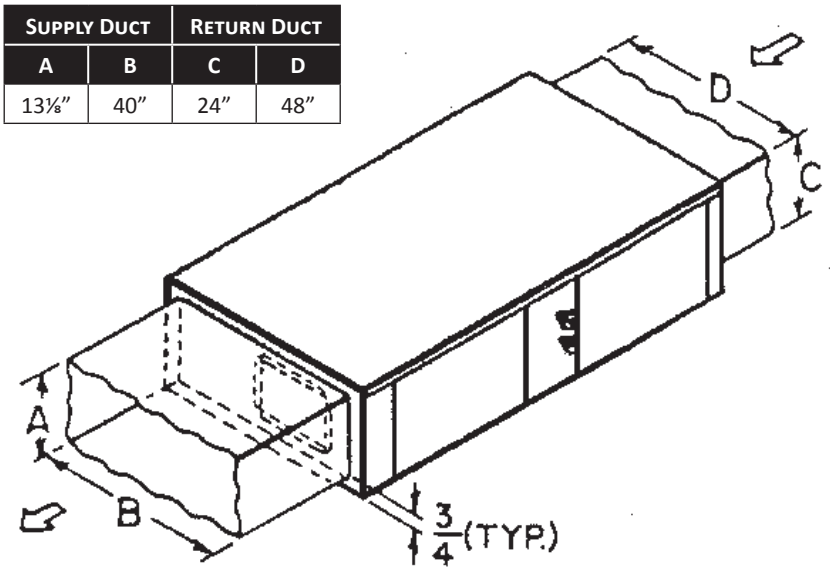

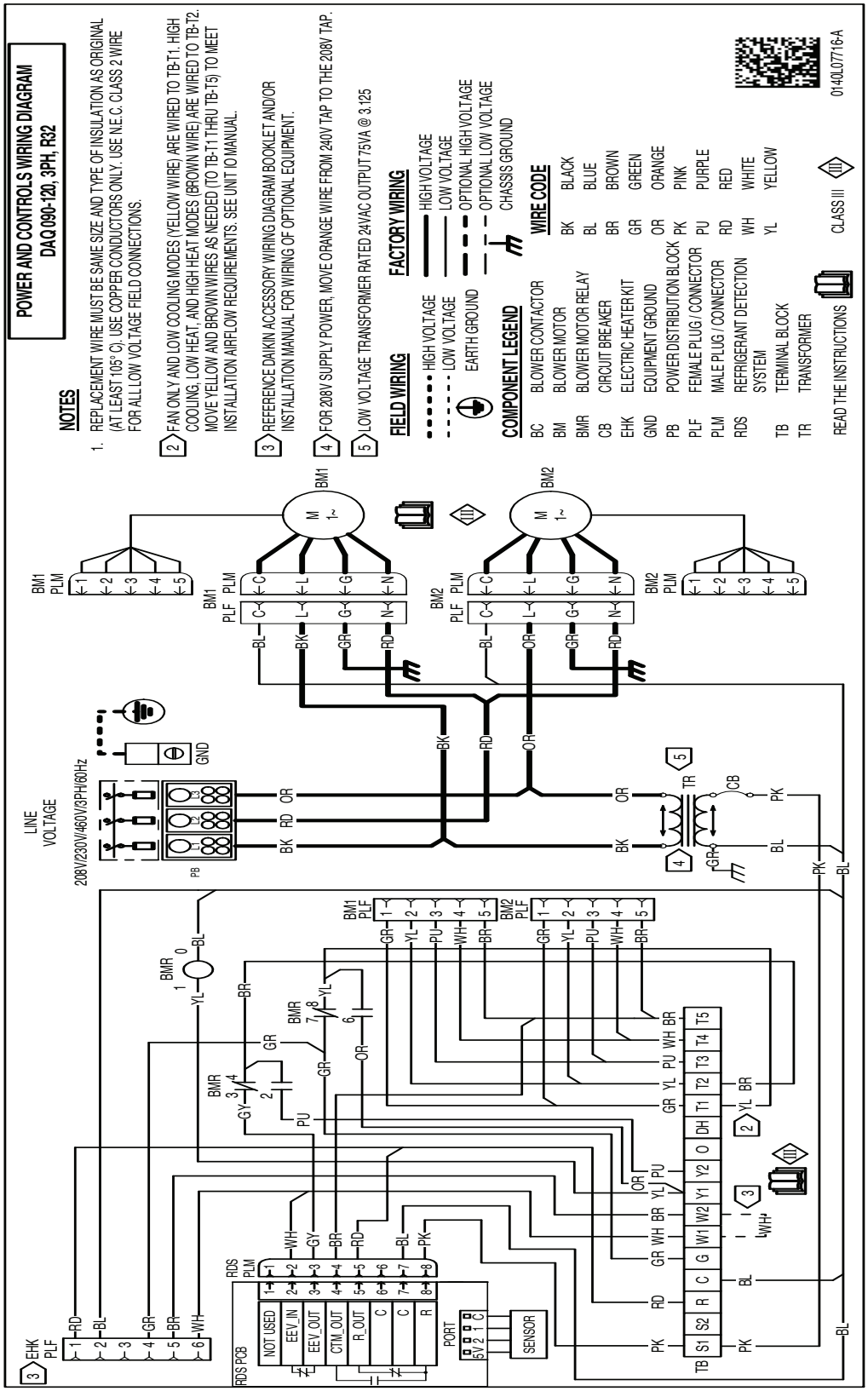

WARNING

High Voltage: Disconnect all power before servicing or installing this unit. Multiple power sources may be present. Failure to do so may cause property damage, personal injury, or death.

Wiring is subject to change. Always refer to the wiring diagram on the unit for the most up-to-date wiring.

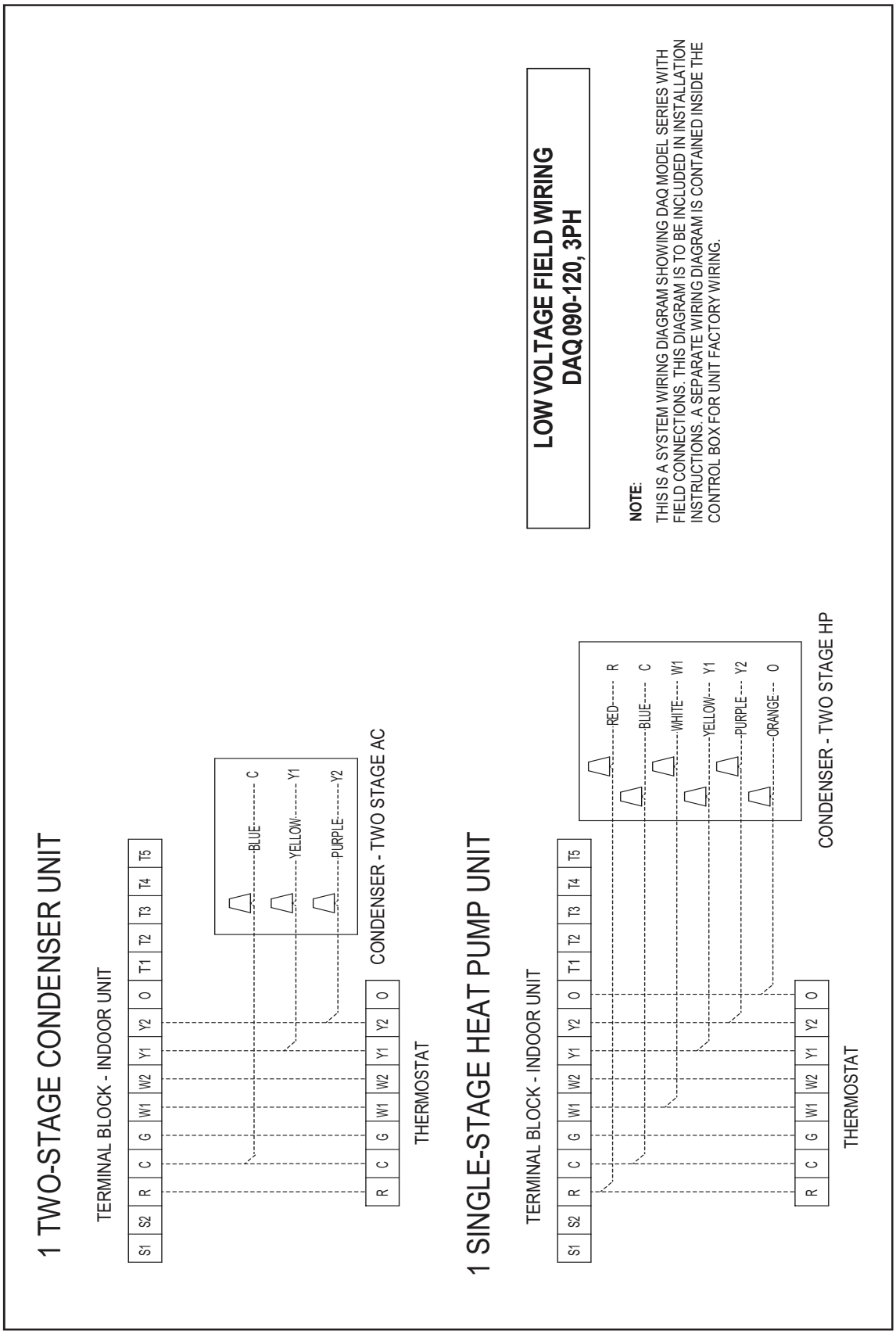

LOW VOLTAGE FIELD WIRING
DAQ090-120, 3PH

NOTE:
THIS IS A SYSTEM WIRING DIAGRAM SHOWING DAQ MODEL SERIES WITH FIELD CONNECTIONS. THIS DIAGRAM IS TO BE INCLUDED IN INSTALLATION INSTRUCTIONS. A SEPARATE WIRING DIAGRAM IS CONTAINED INSIDE THE CONTROL BOX FOR UNIT FACTORY WIRING.

	AHKD MODEL	DAQ090*	DAQ120*
Electric Heat Kits	AHKD15-3A	X	X
	AHKD20-3A	X	X
	AHKD30-3A	X	X
	AHKD15-4A	X	X
	AHKD20-4A	X	X
	AHKD30-4A	X	X
Freeze Protection Kit	FSK05A	X	X
TXV Circurit 1	0151A00013	X	
TXV Circurit 2	0151A00014	X	
TXV Circurit 1	0151A00015		X
TXV Circurit 2	0151A00016		X

Our continuing commitment to quality products may mean a change in specifications without notice.
©2024 **DAIKIN COMFORT TECHNOLOGIES MANUFACTURING, L.P.** • Houston, Texas • Printed in the USA.